RECONSTRUCTION OF WITHERBEE STREET AND APPURTENANT WORK

COVER SHEET- 1

CONSTRUCTION NOTES &
TYPICAL SECTIONS - - - - - - - - - - - - - - - 2

CONSTRUCTION PLANS - - - - - - - - - - - - 3-4

ELECTRICAL PLAN - - - - - - - - - - - - - - - - 5

TYPICAL DETAILS - - - - - - - - - - - - - - - - - 6-8

TRAFFIC MANAGEMENT PLAN - - - - - - - 9

PARKING LOT PLANS - - - - - - - - - - - - - - C-1 - C-4

LOCUS
1"=180'

CONTRACT NO. ED 2023-10
September 14, 2023

PREPARED BY: City of Marlborough
Department of Public Works
Engineering Division
135 Neil Street
Marlborough, MA 01752

UNLESS OTHERWISE PROVIDED FOR IN THE PROJECT SPECIFICATIONS, THE FOLLOWING DOCUMENTS SHALL GOVERN THE CONSTRUCTION ON THIS PROJECT:

-THE 2023 MHD STANDARD SPECIFICATIONS FOR HIGHWAYS AND BRIDGES....AS AMENDED
-THE 2006 PROJECT DEVELOPMENT & DESIGN GUIDE....AS AMENDED
- THE OCTOBER 2017 CONSTRUCTION STANDARD DETAILS HIGHWAY DIVISION AND ANY AMENDMENTS THERETO
-THE AMERICAN STANDARD FOR NURSERY STOCK (ANSI Z60.1)

LEGEND

RIGHT OF WAY

EXISTING CONTOUR (MAJOR) — 100 —

EXISTING CONTOUR (MINOR) — 98 —

PROPOSED CONTOUR (MAJOR) 100

PROPOSED CONTOUR (MINOR) 98

PROPERTY LINE ℄

EASEMENT LINE

TREELINE

CHAIN LINK FENCE X

GAURDRAIL

WATER LINE W

SEWER LINE S

SEWER FORCE MAIN FM

DRAIN LINE D

UNDERGROUND ELECTRIC UGE

TELECOMMUNICATIONS T

OVERHEAD WIRES OHW

HYDRANT

GAS VALVE GV

WATER VALVE WV

SANITARY SEWER MANHOLE S

STORM SEWER MANHOLE D

TELECOMMUNICATIONS MANHOLE T

ELECTRIC MANHOLE E

CATCH BASIN

SIGN

UTILITY POLE

WATER SHUTOFF

WATER MAIN CAP

WATER MAIN TEE

TREE

SHRUB

HANDHOLD

F.E.O.

IRON PIN (FND)

GUY POLE

TRAFFIC LIGHT

SPOT ELEVATION (EXISTING) × 100.50

SPOT ELEVATION (PROPOSED) 100.50

TOP/BOTTOM OF CURB TC/BC

TOP/BOTTOM OF WALL TW/BW

FLOW ARROW

HATCHES:

STRUCTURE

RIPRAP

CONCRETE

WETLANDS

*NOTE: EXISTING INFRASTRUCTURE AND HATCHES ARE SHOWN IN LIGHT GRAY ON CONSTRUCTION PLANS

CONSTRUCTION ABBREVIATIONS

ADJ= ADJUST

HMA= HOT MIX ASPHALT

CB= CATCH BASIN

CONC= CONCRETE

DMH= DRAIN MANHOLE

DWP= DETECTIBLE WARNING PANEL

DYCL= DOUBLE YELLOW CENTERLINE

GG= GAS GATE

EOP= EDGE OF PAVEMENT

EX= EXISTING

GUY= GUY WIRE

HH= HAND HOLE

HYD= HYDRANT

LCB= LAND COURT BOUND

OHW= OVERHEAD WIRE

PL= PROPERTY LINE

PROP= PROPOSED

R&R= REMOVE AND RESET

R&S= REMOVE AND STACK

ROW= RIGHT OF WAY

SMH= SEWER MANHOLE

SW= SIDEWALK

SWEL= SINGLE WHITE EDGE LINE

TCB= TRAFFIC CONTROL BOX

TYP= TYPICAL

UP= UTILITY POLE

WCR= WHEELCHAIR RAMP

WG= WATER GATE

PAVEMENT NOTES

PROPOSED FULL DEPTH RECONSTRUCTION

SURFACE: 4.25" HOT MIX ASPHALT
1.75" SUPERPAVE SURFACE COURSE – 9.5 (SSC-9.5)
2.5" SUPERPAVE INTERMEDIATE COURSE – 19.0 (SIC-19.0)

ASPHALT EMULSION FOR TACK COAT AT 0.05 GAL/SY OVER BASE COURSE AND INTERMEDIATE COURSE

SUB-BASE: 12" SUB-BASE FOR RECLAIM

PROPOSED HOT MIX ASPHALT DRIVEWAY

SURFACE: 3" HOT MIX ASPHALT
1.5" SUPERPAVE SURFACE COURSE – 9.5 (SSC-9.5)
1.5" SUPERPAVE INTERMEDIATE COURSE – 19.0 (SIC-19.0)

SUB-BASE: 8" GRAVEL BORROW TYPE C

PROPOSED HOT MIX ASPHALT PARKING LOT

SURFACE: 4" HOT MIX ASPHALT
1.5" SUPERPAVE SURFACE COURSE – 9.5 (SSC-9.5)
2.5" SUPERPAVE INTERMEDIATE COURSE – 19.0 (SIC-19.0)

SUB-BASE: 12" GRAVEL BORROW TYPE C

PROPOSED CEMENT CONCRETE DRIVEWAY/WHEELCHAIR RAMP

SURFACE: 6" CEMENT CONCRETE AIR ENTRANED 4000 PSI ¾ 810

SUB-BASE: 8" GRAVEL BORROW TYPE C

PROPOSED CEMENT CONCRETE SIDEWALK

SURFACE: 4" CEMENT CONCRETE AIR ENTRANED 4000 PSI ¾ 810

SUB-BASE: 8" GRAVEL BORROW TYPE C

WITHERBEE STREET TYPICAL SECTION
STA. 0+00± TO STA. 7+97±
N.T.S

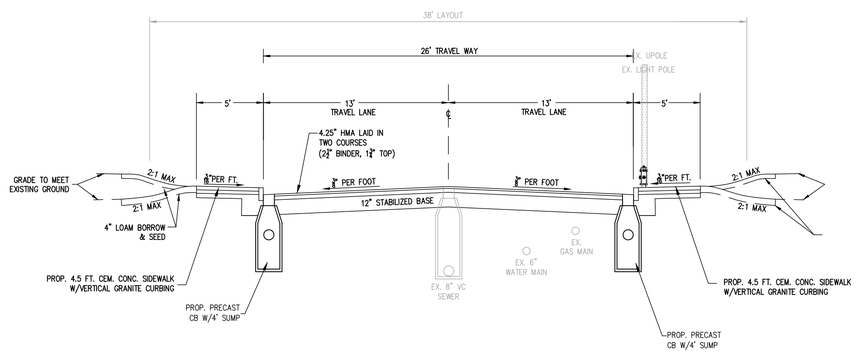

CONSTRUCTION NOTES

1. BASE PLANS AND TOPOGRAPHIC INFORMATION WERE PREPARED FROM SURVEY DATA COMPILED BY THE CITY OF MARLBOROUGH, DEPARTMENT OF PUBLIC WORKS, ENGINEERING DIVISION.

2. EXISTING UTILITIES, WHERE SHOW HEREON, ARE APPROXIMATE. THE CONTRACTOR SHALL BE RESPONSIBLE FOR PROPERLY LOCATING AND COORDINATING ANY ON-SITE ACTIVITY WITH DIG-SAFE AND THE APPROPRIATE UTILITY COMPANY AND MAINTAINING EXISTING UTILITY SYSTEM SERVICE. DIG-SAFE SHALL BE NOTIFIED PER THE COMMONWEALTH OF MASSACHUSETTS STATUTE CHAPTER 82, SECTION 40, AT 1-888-344-7233. NO GUARANTEE IS IMPLIED OR INTENDED AS TO THE ACCURACY, LOCATION OR THAT ALL UTILITIES AND/OR SUBSURFACE STRUCTURES ARE SHOWN. THE CONTRACTOR SHALL VERIFY SIZE, LOCATION AND INVERTS OR UTILITIES AND STRUCTURES AS REQUIRED PRIOR TO THE START OF CONSTRUCTION.

3. THE CONTRACTOR SHALL ALTER THE MASONRY OF THE TOP SECTION OF ALL EXISTING DRAINAGE AND SEWER STRUCTURES AS NECESSARY FOR CHANGES IN GRADE AND RESET ALL WATER, SEWER AND DRAINAGE FRAMES, GRATES AND BOXES TO THE PROPOSED FINISH GRADE. STRUCTURE ADJUSTMENTS SHALL REQUIRE THE USE OF RED CLAY BRICK CONFORMING TO M4.05.2 AND CEMENT CONCRETE CONFORMING TO M4.02.0 OF THE COMMONWEALTH OF MASSACHUSETTS CONSTRUCTION STANDARDS FOR HIGHWAY AND BRIDGES AS MOST RECENTLY AMENDED.

4. THE CONTRACTOR SHALL MAKE ALL ARRANGEMENTS FOR THE ALTERATION AND ADJUSTMENT OF ELECTRIC, TELEPHONE, AND ANY OTHER PRIVATE UTILITIES BY THE UTILITY COMPANIES AT NO ADDITIONAL COST TO THE OWNER. IF THE CONTRACTOR ADJUSTS UTILITY COVERS IT SHALL BE DEEMED PART OF THE WORK AND THERE WILL BE NO ADDITIONAL COMPENSATION.

5. TREES AND SHRUBS WITHIN THE LIMITS OF GRADING SHALL BE REMOVED ONLY UPON APPROVAL OF THE CITY ENGINEER.

6. AREAS OUTSIDE THE LIMITS OF PROPOSED WORK DISTURBED BY THE CONTRACTOR'S OPERATIONS SHALL BE RESTORED BY THE CONTRACTOR TO THEIR ORIGINAL CONDITION AT THE CONTRACTOR'S EXPENSE.

7. THE TERM "PROPOSED" (PROP.) MEANS WORK TO BE CONSTRUCTED USING NEW MATERIALS OR WHERE APPLICABLE, AND APPROVED BY THE CITY ENGINEER, RE-USING EXISTING MATERIALS SUCH AS THOSE IDENTIFIED AS "REMOVE AND RESET" (R&R).

8. JOINTS BETWEEN NEW HOT MIX ASPHALT, ROADWAY PAVEMENT, AND THE LOCATIONS OF SAW CUT FOR EXISTING PAVEMENT SHALL BE SEALED WITH HOT APPLIED ASPHALTIC CRACK FILLER.

9.AREAS OUTSIDE THE LIMITS OF PROPOSED WORK DAMAGED BY THE CONTRACTOR'S OPERATIONS, INCLUDING STAGING AREAS, SHALL BE RESTORED BY THE CONTRACTOR TO THEIR ORIGINAL CONDITION AT THE CONTRACTOR'S EXPENSE.

10. THE CONTRACTOR'S ATTENTION IS DIRECTED TO THE NECESSITY OF MAKING HIS OWN INVESTIGATION IN ORDER TO ASSURE THAT NO DAMAGE TO EXISTING STRUCTURES, DRAINAGE LINES, TRAFFIC SIGNAL CONDUITS, ETCETERA, WILL OCCUR. THE CONTRACTOR SHALL NOTIFY MASSACHUSETTS DIG SAFE AND PROCURE A DIG SAFE NUMBER FOR EACH LOCATION PRIOR TO DISTURBING EXISTING GROUND IN ANY WAY. NO EXISTING PUBLIC UTILITY STRUCTURES SHALL BE ABANDONED AND/OR DISMANTLED WITHOUT AUTHORIZATION FROM THE ENGINEER.

11. GAS MAINS AND TELEPHONE LINES ARE ASSUMED TO HAVE 3 FEET OF COVER UNLESS NOTED OTHERWISE. WATER MAINS ARE ASSUMED TO HAVE 5 FEET OF COVER UNLESS NOTED OTHERWISE. IT IS NOT WARRANTED THAT ALL UTILITIES ARE SHOWN OR THAT THEY ARE PLACED AT THESE ASSUMED DEPTHS. THE CONTRACTOR IS RESPONSIBLE FOR COORDINATING THE RELOCATION OF ANY CONFLICTING UTILITIES WITH THE RESPECTIVE UTILITY COMPANY. RELOCATION OF UTILITIES AND/OR THEIR APPURTENANCES REQUIRED TO ACCOMMODATE THE NEW WORK SHALL BE THE RESPONSIBILITY OF THE CONTRACTOR. FOR THE COST INFORMATION CONCERNING RELOCATION OF UTILITIES SEE SPECIFICATIONS GENERAL CONDITIONS 25 NOTICE TO UTILITIES.

12. ALL EXISTING STATE, COUNTY, CITY AND TOWN LINES AND PRIVATE PROPERTY LINES HAVE BEEN ESTABLISHED FROM AVAILABLE INFORMATION AND THEIR EXACT LOCATION ARE NOT GUARANTEED.

13. BACKFILL SHALL BE UNIFORMLY DISTRIBUTED IN SUCCESSIVE LAYERS, EACH LAYER BEING THOROUGHLY COMPACTED BEFORE THE SUCCEEDING LAYER IS PLACED. THE ENTIRE WIDTH OF THE TRENCH SHALL BE MECHANICALLY OR HAND TAMPED IN SIX (6) INCH LIFTS, A MINIMUM OF TWO (2) FEET ABOVE UTILITY INSTALLATION, AND MECHANICALLY TAMPED THE REMAINDER OR THE FILL IN LIFT DEPTHS NOT GREATER THAN SIX (6) INCHES. THE TOP LAYER OF BACKFILL SHALL BE FOURTEEN (14) INCHES (IN A TEMPORARY TRENCH), AND TWELVE (12) INCHES (IN A PERMANENT TRENCH) OF GRAVEL COMPACTED TO 97% OF MAXIMUM DENSITY.

14. ALL STRUCTURES TO BE REMODELED UNLESS OTHERWISE NOTED.

15. ALL CASTINGS TO BE REPLACED UNLESS OTHERWISE NOTED.

16. ALL SEEDING WORK SHALL BE CARRIED OUT BY AN APPROVED SPRAYING MACHINE SPECIFICALLY USED FOR THIS WORK AND NOT PLACED BY HAND.

17. ALL DRIVEWAYS SHALL BE SAW-CUT AT BLENDING LIMITS SHOWN, OR AS DIRECTED BY THE ENGINEER.

18. ALL WATER GATE BOX TOP SECTIONS TO BE REPLACED.

19. THE CONTRACTOR SHALL COORDINATE WITH EVERSOURCE GAS FOR THE ADJUSTMENT OF GAS GATES & SERVICE BOXES.

20. WHERE SHOWN, EROSION CONTROLS SHALL BE ERECTED AND APPROVED BY THE ENGINEER PRIOR TO START OF WORK. CONTRACTOR SHALL ENSURE THAT NO SILT-LADEN RUNOFF LEAVES THE WORK SITE.

21. THE SURFACE OF CEMENT CONCRETE SIDEWALK AND PEDESTRIAN CURB RAMP PANEL SHALL BE BROOM FINISHED AND BORDERED WITH A 1.5" FINISHING TROWEL.

22. MULCH FOR BLENDING DISTURBED AREAS SHALL MATCH EXISTING.

CITY OF MARLBOROUGH
DEPARTMENT OF PUBLIC WORKS
Engineering Division
135 Neil Street
Marlborough, MA 01752
p. (508) 624-6910
www.marlborough-ma.gov

REVISIONS

No.	Date	Description

Drawn By:	Designed By:	Checked By:	Approved By:
C.L	C.L	M.P	M.P

Project Title:

RECONSTRUCTION OF WITHERBEE STREET AND APPURTENANT WORK

Sheet Title:

NOTES AND TYPICAL SECTION

Contract No: ED-2023-10

Date: 9-14-2023

Scale: 1"=20'

Sheet No.: 2

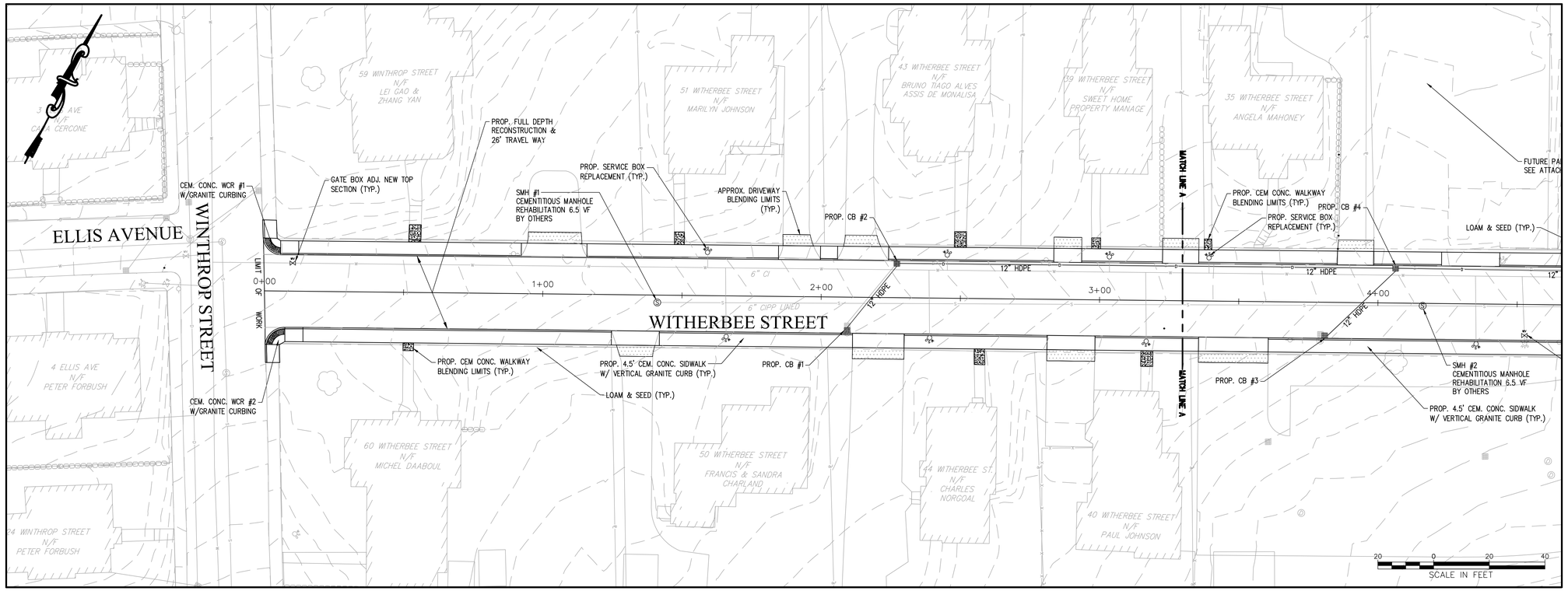

EXISTING SEWER STRUCTURE DATA							
NO.	TYPE	STATION	RIM ELEV.	INV. IN ELEV.	INV. OUT ELEV.	REMARKS
#1	SMH	1+41 RT	463.76'		456.48'	6" UNKNOWN
#2	SMH	4+16 RT	449.48'	442.71'	442.61'	6" UNKNOWN
#3	SMH	8+16 RT	425.35'	418.23'	418.18'	6" UNKNOWN

PROPOSED SEWER STRUCTURE DATA						
NO.	TYPE	STATION	RIM ELEV.	INV. IN ELEV.	INV. OUT ELEV.	REMARKS
#1	SMH	1+41 RT	463.75'		456.48'	REMODEL
#2	SMH	4+16 RT	449.50'	442.71'	442.61'	REMODEL
#3	SMH	8+16 RT	425.35'	418.23'	418.18'	

EXISTING DRAINAGE STRUCTURE DATA						
NO.	TYPE	STATION	RIM ELEV.	INV. IN ELEV.	INV. OUT ELEV.	REMARKS
#2	DMH	6+63 RT	433.80'		425.50'	8" VCP
#7	CB	7+50 LT	428.93'	425.01'	424.58'	12" CMP
#8	CB	7+87 RT	426.13'	422.55'	422.45'	12" PVC

PROPOSED DRAINAGE STRUCTURE DATA						
NO.	TYPE	STATION	RIM ELEV.	INV. IN ELEV.	INV. OUT ELEV.	REMARKS
#1	CB	2+10 RT	462.55'		458.13'	12" CHDPE, REMODEL
#2	CB	2+27 LT	461.65'	457.75'	457.65'	12" CHDPE, REMODEL
#3	CB	3+92 RT	450.95'		446.78'	12" CHDPE, REMODEL
#4	CB	4+06 LT	450.00'	446.10'	446.00'	12" CHDPE, REMODEL
				446.10'		12" CHDPE, REMODEL
#1	DMH	5+17 LT	442.95'	438.95'	434.81'	12" CHDPE, REMODEL
				435.00'		FROM PARKING LOT
#5	CB	6+16 LT	436.20'	431.89'	431.79'	12" CHDPE, REMODEL
#6	CB	6+16 RT	436.20'		430.52'	12" CHDPE, REMODEL
#2	DMH	6+63 RT	433.80'	429.80'	428.76'	12" CHDPE, REMODEL
#7	CB	7+50 LT	428.85'	425.01'	424.67'	12" CMP
				425.05'		12" CHDPE, REMODEL
#8	CB	7+75 RT	426.10'	422.53'	422.43'	12" PVC IN, 12" RCP OUT
				422.55'		12" CHDPE, REMODEL

WITHERBEE STREET WCR TABLE			
WCR #	STATION	TRANSITION LENGTH	
		HIGH SIDE	LOW SIDE
#1	0+03 LT	6'-6"	6'-6"
#2	0+03 RT	6'-6"	6'-6"
#3	7+78 LT	11'-6"	6'-6"
#4	7+80 RT	11'-6"	6'-6"

CITY OF MARLBOROUGH
DEPARTMENT OF PUBLIC WORKS
Engineering Division
135 Neil Street
Marlborough, MA 01752
p. (508) 624-6910
www.marlborough-ma.gov

REVISIONS

No.	Date	Description
1.		

Drawn By:	Designed By:	Checked By:	Approved By:
C.L.	C.L.	M.D.	M.D.

Project Title:

RECONSTRUCTION OF WITHERBEE STREET AND APPURTENANT WORK

Sheet Title:

WITHERBEE STREET CONSTRUCTION PLAN

Contract No: ED-2023-10

Date: 9-14-2023

Scale: 1"=20'

Sheet No.: 3

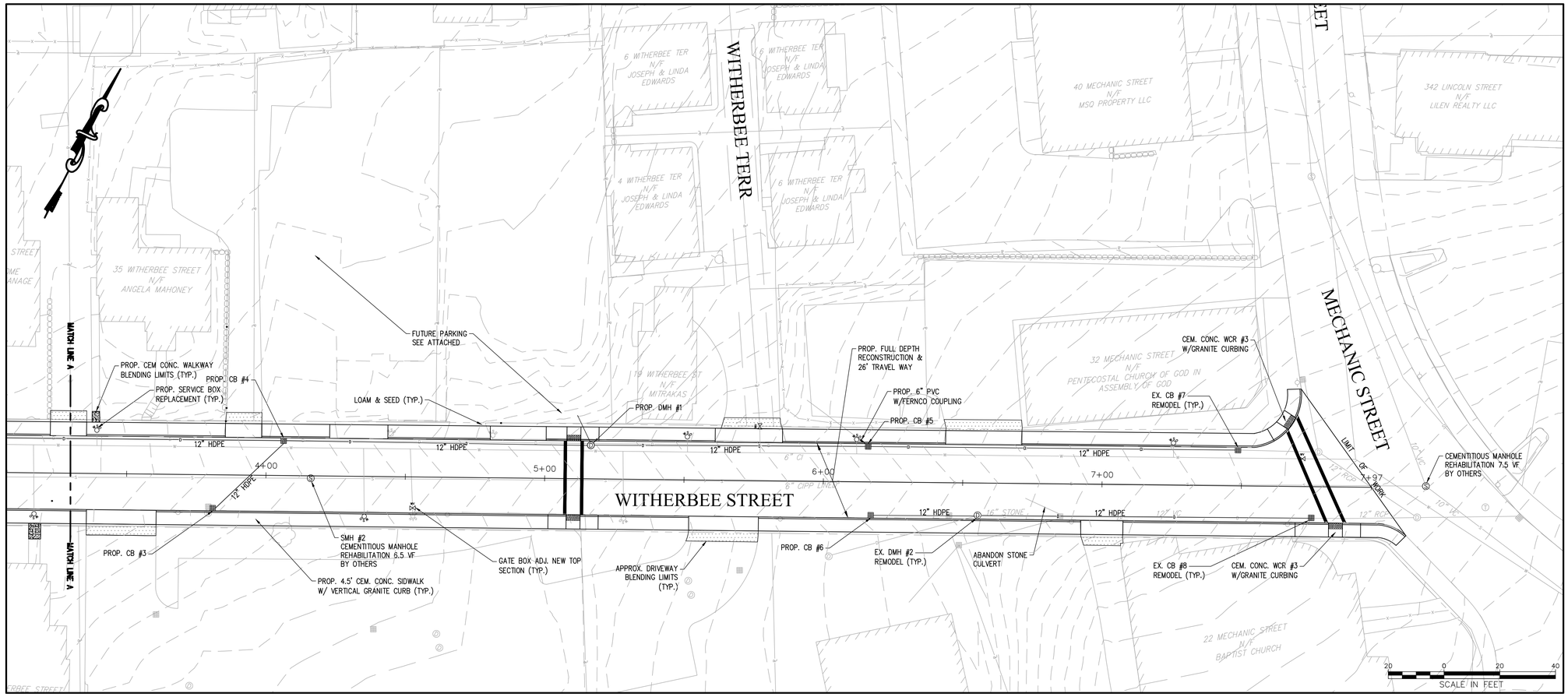

EXISTING SEWER STRUCTURE DATA						
NO.	TYPE	STATION	RIM ELEV.	INV. IN ELEV.	INV. OUT ELEV.	REMARKS
#1	SMH	1+41 RT	463.76'		456.48'	6" UNKNOWN
#2	SMH	4+16 RT	449.48'	442.71'	442.61'	6" UNKNOWN
#3	SMH	8+16 RT	425.35'	418.23'	418.18'	6" UNKNOWN

PROPOSED SEWER STRUCTURE DATA						
NO.	TYPE	STATION	RIM ELEV.	INV. IN ELEV.	INV. OUT ELEV.	REMARKS
#1	SMH	1+41 RT	463.75'		456.48'	REMODEL
#2	SMH	4+16 RT	449.50'	442.71'	442.61'	REMODEL
#3	SMH	8+16 RT	425.35'	418.23'	418.18'	

EXISTING DRAINAGE STRUCTURE DATA						
NO.	TYPE	STATION	RIM ELEV.	INV. IN ELEV.	INV. OUT ELEV.	REMARKS
#2	DMH	6+63 RT	433.80'		425.50'	8" VCP
#7	CB	7+50 LT	428.93'	425.01'	424.58'	12" CMP
#8	CB	7+87 RT	426.13'	422.55'	422.45'	12" PVC

PROPOSED DRAINAGE STRUCTURE DATA						
NO.	TYPE	STATION	RIM ELEV.	INV. IN ELEV.	INV. OUT ELEV.	REMARKS
#1	CB	2+10 RT	462.55'		458.13'	12" CHDPE, REMODEL
#2	CB	2+27 LT	461.65'	457.75'	457.65'	12" CHDPE, REMODEL
#3	CB	3+92 RT	450.95'		446.78'	12" CHDPE, REMODEL
#4	CB	4+06 LT	450.00'	446.10'	446.00'	12" CHDPE, REMODEL
				446.10'		12" CHDPE, REMODEL
#1	DMH	5+17 LT	442.95'	438.95'	434.81'	12" CHDPE, REMODEL
				435.00'		FROM PARKING LOT
#5	CB	6+16 LT	436.20'	431.89'	431.79'	12" CHDPE, REMODEL
#6	CB	6+16 RT	436.20'		430.52'	12" CHDPE, REMODEL
#2	DMH	6+63 RT	433.80'	429.80'	428.76'	12" CHDPE, REMODEL
#7	CB	7+50 LT	428.85'	425.01'	424.67'	12" CMP
				425.05'		12" CHDPE, REMODEL
#8	CB	7+75 RT	426.10'	422.53'	422.43'	12" PVC IN, 12" RCP OUT
				422.55'		12" CHDPE, REMODEL

WITHERBEE STREET WCR TABLE			
WCR #	STATION	TRANSITION LENGTH	
		HIGH SIDE	LOW SIDE
#1	0+03 LT	6'-6"	6'-6"
#2	0+03 RT	6'-6"	6'-6"
#3	7+78 LT	11'-6"	6'-6"
#4	7+80 RT	11'-6"	6'-6"

CITY OF MARLBOROUGH
DEPARTMENT OF PUBLIC WORKS
Engineering Division
135 Neil Street
Marlborough, MA 01752
p. (508) 624-6910
www.marlborough-ma.gov

REVISIONS

No.	Date	Description
1.		

Drawn By: C.L. Designed By: C.L. Checked By: M.P. Approved By: M.P.

Project Title:

RECONSTRUCTION OF WITHERBEE STREET AND APPURTENANT WORK

Sheet Title:

WITHERBEE STREET CONSTRUCTION PLAN

Contract No: ED-2023-10

Date: 9-14-2023

Scale: 1"=20'

Sheet No.: 4

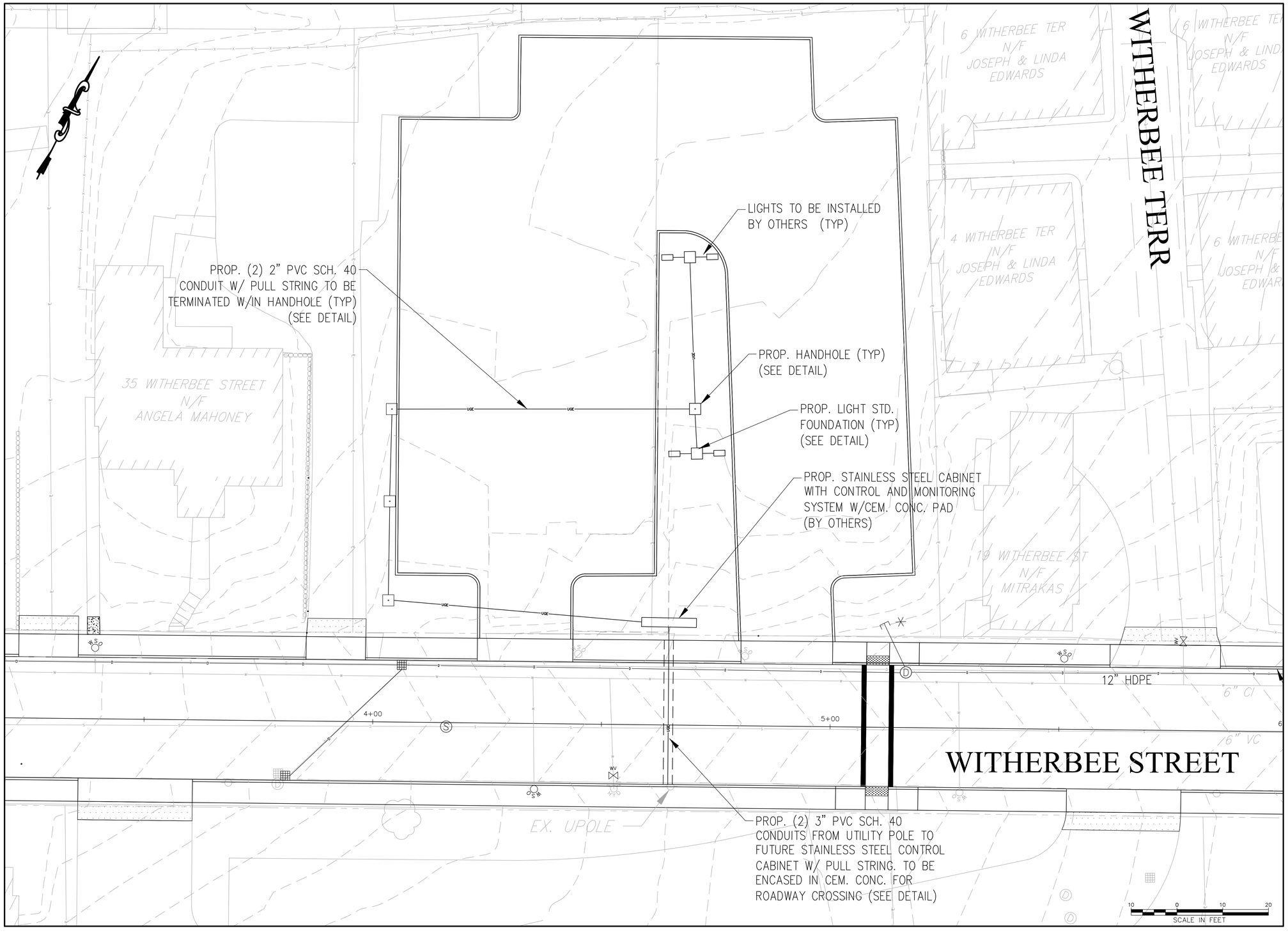

CITY OF MARLBOROUGH

DEPARTMENT OF PUBLIC WORKS

Engineering Division
135 Neil Street
Marlborough, MA 01752
p. (508) 624-6910
www.marlborough-ma.gov

REVISIONS

No.	Date	Description
1.		

Drawn By:	Designed By:	Checked By:	Approved By:
C.L	C.L	M.D	M.D

Project Title:

RECONSTRUCTION OF WITHERBEE STREET AND APPURTENANT WORK

Sheet Title:

ELECTRICAL PLAN

Contract No:	Sheet No.:
ED-2023-10	5
Date: 9-14-2023	
Scale: 1"=10'	

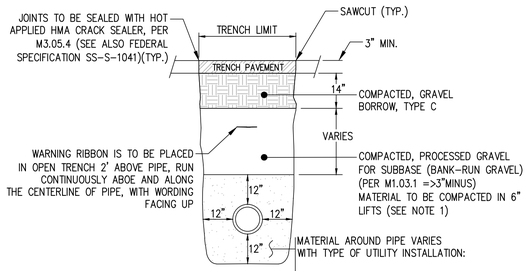

NOTE:
1. COMPACTION EQUIPMENT AND LIFT THICKNESS SHALL MEET OR EXCEED THE MINIMUM REQUIREMENTS TO OBTAIN THE COMPACTION STANDARDS DESCRIBED IN THE CONSTRUCTION NOTES, UNLESS OTHERWISE APPROVED BY THE CITY ENGINEER. IN PROXIMITY TO STRUCTURES, A JUMPING JACK COMPACTOR SHALL BE REQUIRED.
2. WATER MAIN PIPE IS TO HAVE MINIMUM COVER DEPTH OF 5 FEET FROM FINISHED SURFACE.

TYPICAL EXCAVATION TRENCH

N.T.S.

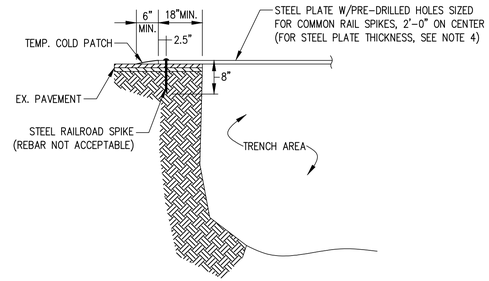

NOTE:
1. THE CITY RESERVES THE RIGHT NOT TO ALLOW THE USE OF STEEL PLATES TO SECURE TRENCHES AT ANY TIME THROUGHOUT CONSTRUCTION.
2. PLACE 48"X48" ORANGE AND BLACK CONSTRUCTION SIGN, STATING "STEEL PLATES 100 FT." TO PROVIDE DRIVERS WITH ADVANCED NOTICE. SEE TRAFFIC MANAGEMENT PLAN FOR PLACEMENT OF SIGNAGE.
3. NOT MORE THAN ONE (1) STEEL PLATE SHALL BE USED AT ANY TIME AND CAN NOT BE USED ON EXCAVATIONS GREATER THAN 7-FEET WIDE.
4. STEEL PLATE DIMENSIONS AND THICKNESS SHALL BE DESIGNED BY THE CONTRACTOR. STEEL PLATE THICKNESS SHALL BE DESIGNED TO ALLOW DEFLECTION OF NOT MORE THAN 0.25".
5. PROVIDE WOOD WEDGES UNDER PLATE EDGES AT UNEVEN SURFACES TO MINIMIZE MOVEMENT.

STEEL PLATE DETAIL

N.T.S.

CONSTRUCTION NOTES

THE FOLLOWING DESCRIBES MATERIALS AND METHODS AS THEY PERTAIN TO ROAD OPENING WORK. ALL WORK SHALL CONFORM TO THE 1988 STANDARD SPECIFICATIONS FOR HIGHWAYS AND BRIDGES, AND ALL SUBSEQUENT SUPPLEMENTAL SPECIFICATIONS THERETO.

BACKFILL MATERIALS

EXCAVATIONS IN THE STREET PAVEMENT AREAS SHALL BE CAREFULLY BACKFILLED WITH LAYERS OF SUITABLE GRAVEL. THE TWELVE (12) INCHES OF BEDDING MATERIAL AROUND PIPES SHALL BE SAND (M1.04.0) FOR WATER, ¾" CRUSHED STONE (M2.01.0) FOR SEWER, GRAVEL BORROW – TYPE C (M1.03.0) FOR RCP DRAIN & TYPE D (M1.03.0) FOR CHDPE DRAIN OR AS SPECIFIED BY THE OWNER OF THE UTILITY AND APPROVED BY THE CITY OF MARLBOROUGH.

SUITABLE BANK-RUN GRAVEL MATERIAL FOR BACKFILLING SHALL BE GRANULAR FILL CONSISTING OF MINERAL SOIL SUBSTANTIALLY FREE FROM CLAY, ORGANIC MATERIALS, LOAM, WOOD, TRASH OR OTHER OBJECTIONABLE MATERIAL WHICH MAY NOT BE COMPRESSIBLE OR WHICH CANNOT BE PROPERTY COMPACTED. IT SHALL NOT CONTAIN STONES, BROKEN CONCRETE, MASONRY RUBBLE OR OTHER SIMILAR MATERIALS. IT SHALL HAVE PHYSICAL PROPERTIES SUCH THAT IT CAN BE READILY SPREAD AND COMPACTED. IT SHALL NOT CONTAIN ANY SNOW, ICE OR FROZEN SOIL.

BACKFILL MATERIAL SHALL CONSIST OF CONTROLLED DENSITY FILL (CDF) – TYPE 1E OR 2E (M4.08.0) FOR ALL MAJOR ROADWAYS OF THE CITY OR AS DIRECTED BY THE COMMISSIONER OF PUBLIC WORKS. WHERE REQUIRED, CDF SHALL BE PLACED TO WITHIN A MINIMUM OF 5" FROM THE TOP OF THE EXISTING PAVEMENT OR AS DIRECTED BY THE CITY'S INSPECTOR. CDF SHALL BY TYPE 1E VERY FLOWABLE (EXCAVATABLE) OR TYPE 2E FLOWABLE (EXCAVATABLE) WITH A MAXIMUM STRENGTH OF 200 PSI AND 25-30% AIR. CDF (TYPE 1E AND 2E) SHALL BE EXCAVATABLE USING SIMPLE HAND TOOLS WHERE REQUIRED.

IF CONTROL DENSITY FILL IS USED TO BACKFILL THE TRENCH, PERMANENT TRENCH PAVING CAN BE PERFORMED ONCE THE CONTROL DENSITY FILL HAS SET, ELIMINATING THE TEMPORARY TRENCH PAVING REQUIREMENT. PROOF OF CONTROL DENSITY FILL SHALL BE REQUIRED IN ORDER TO BE GRANTED RELIEF FROM PERMANENT TRENCH PAVING. PLEASE NOTE, SHOULD THE TRENCH SHOW ANY SIGNS OF FAILURE, THE CONTRACTOR SHALL EXCAVATE THE HOT MIX ASPHALT IN QUESTION AND PERFORM TRENCH PAVING MEETING THE CITY OF MARLBOROUGH'S SPECIFICATIONS.

COMPACTION OF BACKFILL

BACKFILL SHALL BE UNIFORMLY DISTRIBUTED IN SUCCESSIVE LAYERS, EACH LAYER BEING THOROUGHLY COMPACTED BEFORE THE SUCCEEDING LAYER IS PLACED. THE ENTIRE WIDTH OF THE TRENCH SHALL BACKFILLED AND MECHANICALLY TAMPED IN LIFT DEPTHS NOT GREATER THAN (6) INCHES. COMPACTION EQUIPMENT AND LIFT THICKNESS SHALL MEET OR EXCEED THE MINIMUM REQUIREMENTS TO OBTAIN THE COMPACTION STANDARDS UNLESS OTHERWISE APPROVED BY THE CITY ENGINEER. THE TOP LAYER OF BACKFILL SHALL BE FOURTEEN (14) INCHES OF GRAVEL COMPACTED TO 97% OF MAXIMUM DENSITY.

GRADING ROLLING AND FINISHING

PAVEMENT PLACED SHALL BE PLACED AND RAKED TO A UNIFORM SURFACE, ROLLED TO THE REQUIRED THICKNESS AND TO A GRADE THAT WILL MATCH THE EXISTING BITUMINOUS ROAD SURFACE. THE PERMITTEE SHALL MAINTAIN THE SURFACING AND SHALL PROMPTLY FILL WITH SIMILAR MATERIAL ANY DEPRESSION AND HOLES THAT MAY OCCUR SO AS TO KEEP THE SURFACING IN A SAFE AND SATISFACTORY CONDITION FOR TRAFFIC.

TEMPORARY PAVEMENT

A TEMPORARY PAVEMENT SHALL BE PLACED ON THE SURFACE OF THE FILL AND THOROUGHLY COMPACTED. A TEMPORARY PAVEMENT SHALL BE HOT MIX ASPHALT NO LESS THAN THE EXISTING BASE COURSE OR A MINIMUM THREE (3) INCHES THICK (SEE EXCAVATION TRENCH DETAIL). IF PLATES ARE USED PRIOR TO TEMPORARY PAVING, THEY SHALL BE RAMPED TO MATCH THE EXISTING PAVEMENT. TEMPORARY PAVING OR STEEL PLATING SHALL IMMEDIATELY FOLLOW THE BACKFILLING OPERATION OR AS DIRECTED BY ENGINEER.

PERMANENT PAVING

THE FINAL HOT MIX ASPHALT SURFACE SHALL NOT BE PLACED ANY EARLIER THAN 65 DAYS OR NO LATER THAN 90 DAYS FROM THE DATE OF COMPLETION OF THE TEMPORARY SURFACE WITHOUT APPROVAL FROM THE COMMISSIONER OF PUBLIC WORKS. THE TEMPORARY PAVEMENT SHALL BE MILLED TO A DEPTH OF ONE AND ONE-HALF (1 ½) INCHES, TWELVE (12) INCHES OUTSIDE OF THE TEMPORARY PAVING LIMITS. PAVEMENT LIMITS JOINTS ARE TO BE SEALED WITH HOT APPLIED HMA CRACK SEALER, PER M3.05.4. IN SOME INSTANCES, FOR PROJECTS BEYOND A SIMPLE TRENCH EXCAVATION ADDITIONAL PAVEMENT DETAILS AND RESURFACING REQUIREMENTS MAY BE INCLUDED AS A SPECIAL CONDITION IN THE PERMIT.

PROTECTIVE SYSTEMS

ALL EXCAVATIONS MUST BE PROPERLY SLOPED, SHORED, OR SHIELDED UNLESS THEY ARE MADE ENTIRELY IN STABLE ROCK, OR LESS THAN (5) FEET DEEP AND DECLARED SAFE AFTER AN INSPECTION BY A COMPETENT PERSON.

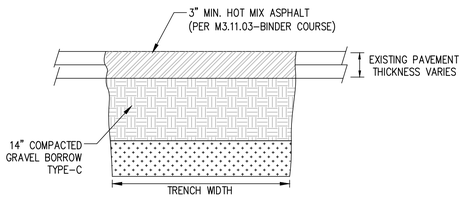

NOTE:
1. COMPACTION EQUIPMENT AND LIFT THICKNESS SHALL MEET OR EXCEED THE MINIMUM REQUIREMENTS TO OBTAIN THE COMPACTION STANDARDS DESCRIBED IN THE CONSTRUCTION NOTES, UNLESS OTHERWISE APPROVED BY THE CITY ENGINEER. IN PROXIMITY TO STRUCTURES, A JUMPING JACK COMPACTOR SHALL BE REQUIRED.

TEMPORARY TRENCH PAVING TYPICAL SECTION

N.T.S.

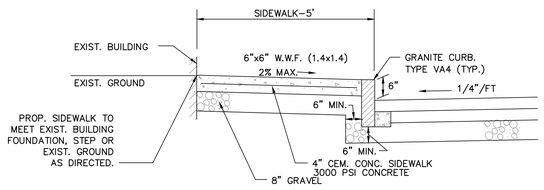

NOTE: CONSTRUCTION JOINTS ARE TO BE AT 6' INTERVALS.

CEMENT CONCRETE SIDEWALK DETAIL

N.T.S.

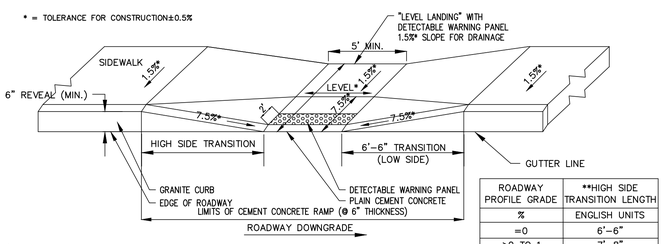

NOTE:
1. ROADWAY / GUTTER TO BE ADJUSTED FOR FIELD CONDITIONS
2. DETECTABLE WARNING PANEL:
   MATERIAL – HOMOGENOUS GLASS AND CARBON REINFORDED COMPOSITE
   METHOD OF SETTING – CAST IN PLACE REPLACEABLE TACTILE PANEL
   COLOR – FEDERAL YELLOW PER FEDERAL STANDARD 595B TABLE IV, COLOR NO. 33538

WHEELCHAIR RAMP ON NARROW SIDEWALK WITH DETECTABLE WARNING PANEL

N.T.S.

ROADWAY PROFILE GRADE	**HIGH SIDE TRANSITION LENGTH
%	ENGLISH UNITS
=0	6'-6"
>0 TO 1	7'-8"
>1 TO 2	9'-0"
>2 TO 3	11'-0"
>3 TO 4	14'-0"
>4 TO 5	15'-0" MAX

**BASED ON A DESIGN SLOPE OF 7.5% AND A REVEAL OF 6"

CITY OF MARLBOROUGH
DEPARTMENT OF PUBLIC WORKS
Engineering Division
135 Neil Street
Marlborough, MA 01752
p. (508) 624-6910
www.marlborough-ma.gov

REVISIONS

No.	Date	Description

Drawn By:	Designed By:	Checked By:	Approved By:
C.L	C.L	M.P	TP

Project Title:
RECONSTRUCTION OF WITHERBEE STREET AND APPURTENANT WORK

Sheet Title:
TYPICAL DETAILS

Contract No: ED-2023-10
Date: 9-14-2023
Scale: N.T.S.
Sheet No.: 6

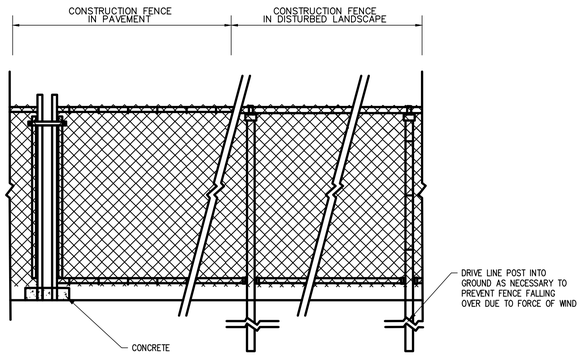

NOTE:
1. TEMPORARY CONSTRUCTION FENCE SHALL BE PROVIDED AT PROJECT LIMITS AS INDICATED IN DRAWINGS AND SPECIFIED
2. TEMPORARY CONSTRUCTION FENCE TO INCLUDE SCREENING

TEMPORARY CONSTRUCTION FENCE W/ SCREENING

N.T.S.

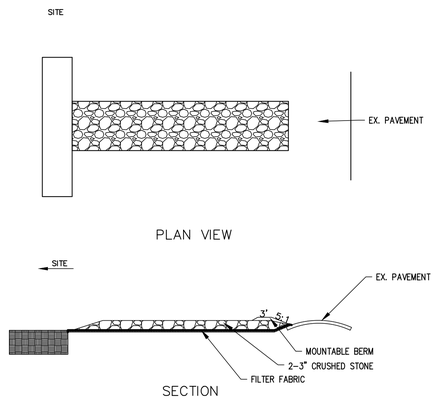

TEMPORARY CONSTRUCTION ENTRANCE

N.T.S.

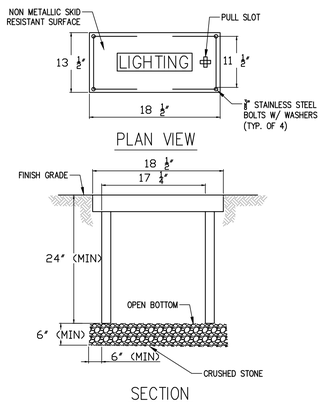

NOTE:
1. THIS HANDHOLE IS INTENDED FOR NON-DELIBERATE VEHICULAR TRAFFIC ONLY, ANSI TIER 22 (22.55 POUND DESIGN LOAD)
2. HANDHOLE SHALL BE PREFABRICATED POLYMER CONCRETE AGGREGATE EQUAL TO QUAZITE OR EQUAL PRE CAST CONCRETE CONSTRUCTION

TYPICAL PREFABRICATED HANDHOLE DETAIL

N.T.S.

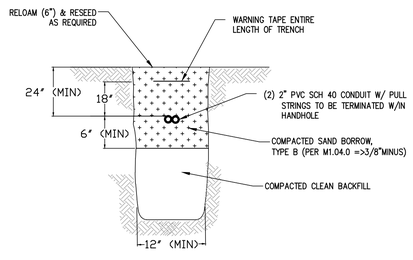

NOTE:
1. THIS DETAIL IS INTENDED TO ILLUSTRATE REQUIREMENTS WHICH EXCEED THOSE REQUIRED BY NEC TABLE 300-5
2. WARNING TAPE SHALL BE DETECTABLE TYPE FOIL BACKED 4MIL POLYETHYLENE WITH FADE RESISTANT " BURIED ELECTRIC LINE BELOW" A MINIMUM OF 18 INCHES ABOVE THE BURIED SERVICE. TAPE SHALL BE EQUAL TO T&B NAF-0708
3. ALL CONDUIT RISERS SHALL UTILIZE LONG RADIUS SWEEPS

BURIED CONDUIT DETAIL

N.T.S.

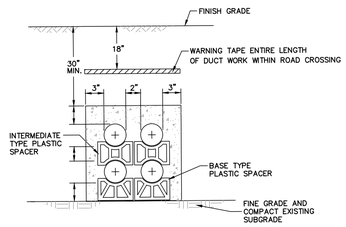

NOTE:
1. THIS DETAIL IS INTENDED TO ILLUSTRATE CONSTRUCTION OF TYPICAL DUCT BANK. REFER TO REFERENCED SECTION FOR QUANTITY AND SIZE OF CONDUIT REQUIRED.
2. WARNING TAPE SHALL BE DETECTABLE TYPE FOIL BACKED 4 MIL POLYETHYLENE WITH FADE RESISTANT "BURIED ELECTRIC LINE BELOW" A MINIMUM OF 12 INCHES ABOVE THE BURIED SERVICE. TAPE SHALL BE EQUAL TO T & B NAF-0705.
3. CONDUIT SHALL BE SCHEDULE 40 PVC-SEE PLAN FOR CONDUIT SIZES AND LOCATIONS.
4. CONDUITS SHALL BE PLUGGED WITH PLASTIC CAPS. PULLING WIRE SHALL BE THREADED THRU CAP AND SECURED ON THE OUTSIDE OF CAP.

DUCT BANK SECTION

N.T.S.

CITY OF MARLBOROUGH
DEPARTMENT OF PUBLIC WORKS
Engineering Division
135 Neil Street
Marlborough, MA 01752
p. (508) 624-6910
www.marlborough-ma.gov

REVISIONS

No.	Date	Description

Drawn By:	Designed By:	Checked By:	Approved By:
CL	CL	MJD	TD

Project Title:
RECONSTRUCTION OF WITHERBEE STREET AND APPURTENANT WORK

Sheet Title:
TYPICAL DETAILS

Contract No: ED-2023-10
Date: 9-14-2023
Scale: N.T.S.
Sheet No.: 7

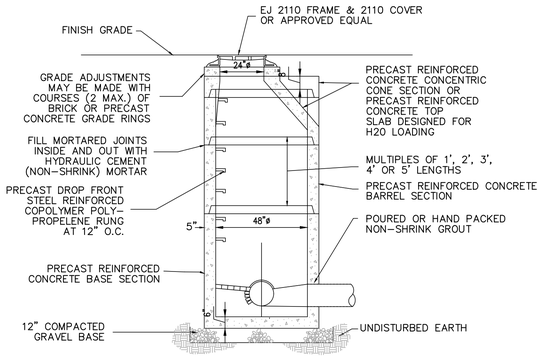

PRECAST CONCRETE DRAIN MANHOLE

N.T.S.

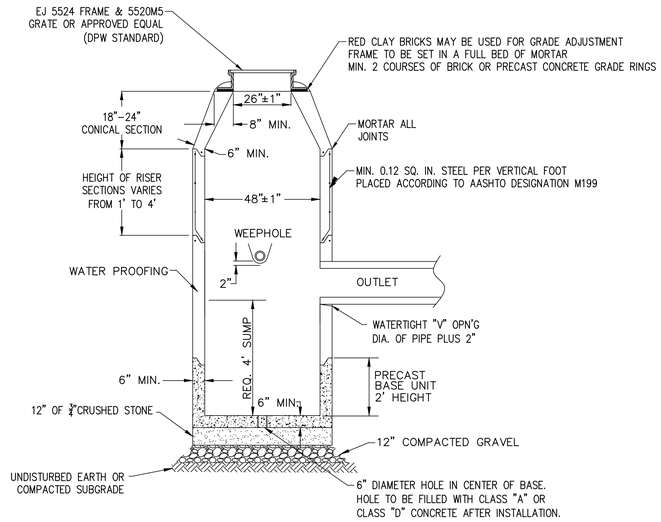

PRECAST CONCRETE CATCH BASIN DETAIL

N.T.S.

NOTE:
ALL CONCRETE STRUCTURES SHALL BE CAPABLE OF WITHSTANDING H20 LOADING

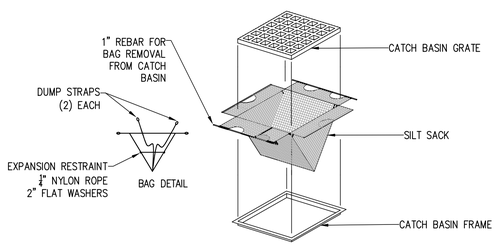

SILT SACK

N.T.S.

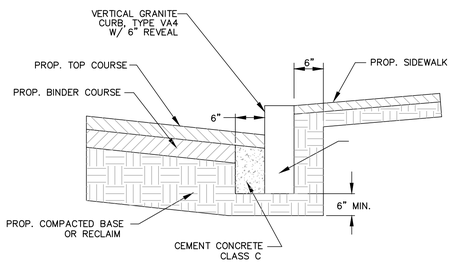

SETTING VERTICAL CURB

N.T.S.

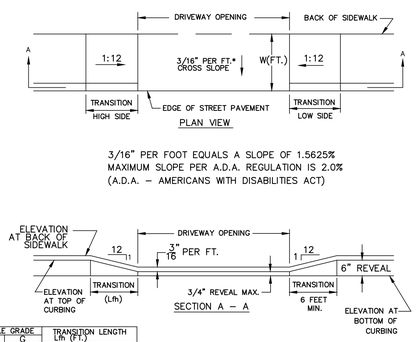

3/16" PER FOOT EQUALS A SLOPE OF 1.5625%
MAXIMUM SLOPE PER A.D.A. REGULATION IS 2.0%
(A.D.A. – AMERICANS WITH DISABILITIES ACT)

PROFILE GRADE		TRANSITION LENGTH
%	G	Lh (FT.)
0	0	6.0
1	.01	7.0
2	.02	8.0
3	.03	9.5
4	.04	11.5
5+	.05	15.0 MAX.

DRIVEWAY REQ. HMA S.W

N.T.S.

CITY OF MARLBOROUGH
DEPARTMENT OF PUBLIC WORKS
Engineering Division
135 Neil Street
Marlborough, MA 01752
p. (508) 624-6910
www.marlborough-ma.gov

REVISIONS

No.	Date	Description

Drawn By:	Designed By:	Checked By:	Approved By:
C.L	C.L	M.D	TD

Project Title:
RECONSTRUCTION OF WITHERBEE STREET AND APPURTENANT WORK

Sheet Title:
TYPICAL DETAILS

Contract No: ED-2023-10
Date: 9-14-2023
Scale: N.T.S.
Sheet No.: 8

CONSTRUCTION SIGN LEGEND

IDENTIFICATION NUMBER	SIZE OF SIGN WIDTH	SIZE OF SIGN HEIGHT	TEXT	TEXT DIMENSIONS LETTER HEIGHT	TEXT DIMENSIONS VERTICAL SPACING	TEXT DIMENSIONS ARROW	COLOR BACK-GROUND	COLOR LEGEND	COLOR BORDER	UNIT AREA IN SQUARE FEET
W20-1D	48"	48"	STEEL PLATES 100 FT	MUTCD STANDARD DETAIL			MUTCD STANDARD DETAIL			16.0
W20-1A	48"	48"	ROAD WORK AHEAD							16.0
W20-1B	48"	48"	ROAD WORK 1000 FT							16.0
W20-1C	48"	48"	ROAD WORK 500 FT							16.0
W20-4	48"	48"	ONE LANE ROAD AHEAD							16.0
W20-7b	48"	48"	BE PREPARED TO STOP							16.0
W20-8	48"	48"	POLICE OFFICER AHEAD							16.0
G20-2	36"	18"	END ROAD WORK							4.5
R11-2	48"	30"	ROAD CLOSED							10.0
W5-1	48"	48"	ROAD NARROWS							16.0
W1-4L	30"	30"								6.25
W1-4R	30"	30"								6.25
M4-8A	24"	18"	END DETOUR							3.0
M4-9L	30"	24"	DETOUR							5.0
M4-9R	30"	24"	DETOUR							5.0
M4-9V	30"	24"	DETOUR							5.0
W20-2	48"	48"	DETOUR AHEAD							16.0

LEGEND

SINGLE DIRECTION TRAFFIC FLOW ARROW
DOUBLE DIRECTION TRAFFIC FLOW ARROW
TRAFFIC MANAGEMENT SIGN
TRAFFIC BARREL / DRUM
CHANGEABLE MESSAGE SIGN
LANE DELINEATOR
CONE
POLICE DETAIL
SPECIAL LIGHTING UNIT
SLU (LT)
PROPOSED WORK AREA

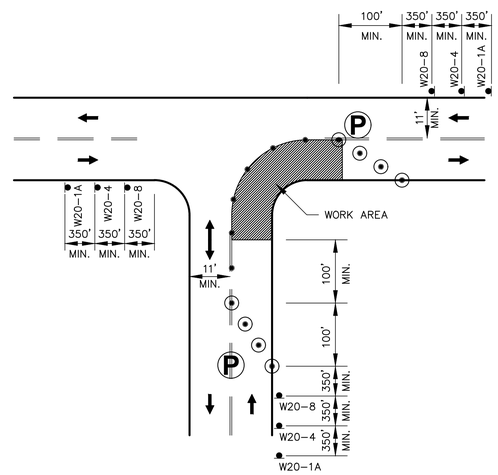

NOTE:
1. ADVANCE WARNING SIGN PLACEMENT TO BE ADJUSTED AS NECESSARY.
2. ALL DRUMS AND CONES TO BE SPACED @ 20' O.C.

ONE LANE BI-DIRECTIONAL TRAFFIC AT INTERSECTIONS

N.T.S.

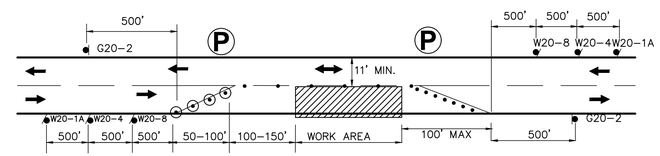

TYPICAL TWO WAY ALTERNATING TRAFFIC

N.T.S.

NOTE: THIS DETAIL SHOWS A RIGHT LANE CLOSURE DETAIL. THIS DETAIL CAN ALSO BE USED FOR LEFT LANE CLOSURES, WITH THE SIGN PLACEMENT REVERSED AS APPROPRIATE.

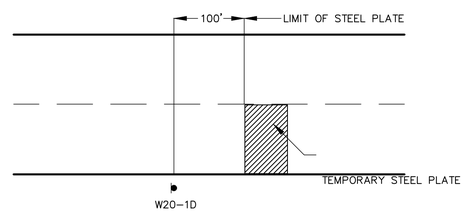

TRENCH PLATE SIGNING

N.T.S.

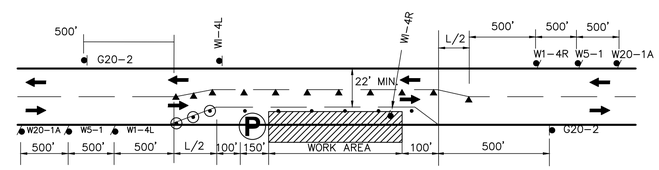

TYPICAL TWO WAY STREET LANE SHIFT

N.T.S.

NOTE: THIS DETAIL SHOWS A RIGHT LANE CLOSURE DETAIL. THIS DETAIL CAN ALSO BE USED FOR LEFT LANE CLOSURES, WITH THE SIGN PLACEMENT REVERSED AS APPROPRIATE.

$L=WS^2/60$ (FEET) FOR 40 MPH OR LESS
$L=WS$ FOR 45 MPH OR MORE

W=WIDTH OF OFFSET (FT)
S= POSTED SPEED LIMIT (MPH)

OPERATIONAL SIGNING

N.T.S.

ALL DRUMS AND SIGNS ARE SHOWN AS THEY SHOULD APPEAR DURING THE WORKING DAY, OR WHILE OPERATING IN THE WORK ZONE.

GENERAL NOTES

1. ALL CONSTRUCTION SIGNING, DRUMS, BARRICADES AND OTHER DEVICES SHALL CONFORM WITH THE LATEST EDITION OF THE MANUAL ON UNIFORM TRAFFIC CONTROL DEVICES (MUTCD) AS AMENDED.

2. ALL DRUMS SHALL BE APPROXIMATELY PLACED AND MOVED AS NECESSARY TO MAINTAIN ADEQUATE ABUTTER ACCESS AT ALL TIMES. WORK MAY REQUIRE ADDITIONAL SIGNS, DRUMS AND OTHER TRAFFIC CONTROL DEVICES, GRADING AND TEMPORARY PAVEMENT FOR PASSAGE OF PEDESTRIAN, VEHICULAR AND EMERGENCY TRAFFIC THROUGH THE WORK AREAS, BOTH DURING AND AFTER WORKING HOURS, TO MAINTAIN SUCH ACCESS.

3. THE CONTRACTOR SHALL NOTIFY EACH ABUTTER AT LEAST 24 HOURS IN ADVANCE OF THE START OF ANY WORK THAT WILL REQUIRE THE TEMPORARY CLOSURE OF ACCESS, SUCH AS EXISTING PAVEMENT EXCAVATION, TEMPORARY DRIVEWAY PAVEMENT PLACEMENT AND SIMILAR OPERATIONS.

4. DURING WORK IN INTERSECTIONS A MINIMUM OF ONE LANE OF ALTERNATING TRAFFIC SHALL BE ALLOWED TO PASS AT ALL TIMES. (POLICE DETAILS SHALL BE PRESENT DURING THIS WORK.)

5. GRADE SEPARATIONS IN EXCESS OF 2" DURING NON-WORKING HOURS WILL REQUIRE DELINEATION BY USE OF DRUMS.

6. EXCAVATION EDGES IN EXCESS OF 4" DEEP SHALL BE PROTECTED DURING NON-WORKING HOURS BY BACKFILLING WITH A WEDGE OF GRAVEL OR SOIL TO COMPACTED 4:1 SLOPE.

7. 11' MINIMUM TRAVEL LANE WIDTHS SHALL BE MAINTAINED AT ALL TIMES.

8. NON-ESSENTIALS TRAFFIC CONTROL DEVICES SHALL BE COVERED OR REMOVED DURING NON-WORKING HOURS.

9. TRAFFIC MANAGEMENT SHALL INCLUDE CONSIDERATIONS FOR PEDESTRIANS ACCESS AT ALL TIMES.

10. NO SIGNAGE SHALL BE INSTALLED ON UTILITY POLES OR OTHER PRIVATE PROPERTY UNLESS CONTRACTOR RECEIVES WRITTEN PERMISSION FROM OWNER AND PROVIDES A COPY OF SAID AGREEMENT TO THE ENGINEER.

11. SPECIFIC SIGNAGE SHALL BE USED WHEN TEMPORARY TRENCH PLATES ARE INSTALLED. (SEE DETAIL ON THIS SHEET).

12. TRAFFIC MANAGEMENT PLAN REPRESENTS MINIMUM REQUIREMENTS. CONTRACTOR TO BE SOLELY RESPONSIBLE FOR TRAFFIC MANAGEMENT AND SAFETY IN WORK ZONE AREAS. DETOUR SHALL ONLY BE ESTABLISHED AND/OR ALTERED BY WITH THE APPROVAL OF THE ENGINEER.

13. THE CONTRACTOR IS RESPONSIBLE FOR NOTIFYING THE RESPECTIVE PUBLIC SERVICE CORPORATIONS OR OFFICIALS OF THEIR INTENTIONS AT LEAST ONE WEEK IN ADVANCE OF THE COMMENCEMENT OF OPERATIONS. THE CONTRACTOR MAY HAVE TO COORDINATE ON A DAILY BASIS IF THE DETOUR OR WORK ZONES HAVE CHANGED. FOR A LIST OF SAID CORPORATIONS PLEASE SEE THE CONTRACT DOCUMENTS "GENERAL CONDITIONS".

CITY OF MARLBOROUGH
DEPARTMENT OF PUBLIC WORKS
Engineering Division
135 Neil Street
Marlborough, MA 01752
p. (508) 624-6910
www.marlborough-ma.gov

REVISIONS

No.	Date	Description

Drawn By: CL | Designed By: CL | Checked By: MLP | Approved By: TP

Project Title:
RECONSTRUCTION OF WITHERBEE STREET AND APPURTENANT WORK

Sheet Title:
TRAFFIC MANAGEMENT PLAN

Contract No: ED-2023-10
Date: 9-14-2023
Scale: N.T.S.
Sheet No: 12

WITHERBEE STREET PARKING LOT

MARLBOROUGH, MA

LAYOUT AND MATERIAL NOTES

1. EXISTING CONDITIONS INFORMATION IS REPRODUCED FROM THE SURVEY PREPARED BY CITY OF MARLBOROUGH DPW.

2. THE LOCATIONS OF UNDERGROUND UTILITIES SHOWN ARE BASED ON THE SURVEY REFERENCED ABOVE. THE CONTRACTOR SHALL NOTIFY DIGSAFE AND THE PROPER LOCAL AUTHORITIES OR RESPECTIVE UTILITY COMPANIES TO CONFIRM THE LOCATION OF ALL EXISTING UTILITIES BEFORE COMMENCING WORK. ANY DAMAGE DUE TO FAILURE OF THE CONTRACTOR TO CONTACT THE PROPER AUTHORITIES SHALL BE BORNE BY THE CONTRACTOR.

3. CONTRACTOR(s) SHALL THOROUGHLY FAMILIARIZE THEMSELVES WITH ALL CONSTRUCTION DOCUMENTS, SPECIFICATIONS, AND SITE CONDITIONS PRIOR TO BIDDING AND PRIOR TO CONSTRUCTION.

4. ANY DISCREPANCIES BETWEEN DRAWINGS, SPECIFICATIONS, AND SITE CONDITIONS SHALL BE REPORTED IMMEDIATELY TO THE OWNER'S REPRESENTATIVE FOR CLARIFICATION AND RESOLUTION PRIOR TO BIDDING OR CONSTRUCTION.

5. ALL WORK CONDUCTED WITHIN PUBLIC RIGHT-OF-WAYS SHALL CONFORM TO THE REQUIREMENTS AND SPECIFICATIONS OF THE CITY OF MARLBOROUGH, MA. .

6. ACCESSIBLE CURB RAMPS SHALL BE PER THE MASSACHUSETTS ARCHITECTURAL ACCESS BOARD (AAB) AND THE AMERICANS WITH DISABILITIES ACT (ADA) ACCESSIBILITY GUIDELINES, WHICHEVER IS MORE STRINGENT.

8. THE FOLLOWING LAYOUT CRITERIA SHALL CONTROL UNLESS OTHERWISE NOTED ON THE PLAN:

   ALL DIMENSIONS ARE TO FACE OF CURB AT GUTTER LINE.
   ALL DIMENSIONS ARE TO CENTER OF PAVEMENT MARKINGS.
   ALL TIES TO PROPERTY LINES ARE PERPENDICULAR TO THE PROPERTY LINE UNLESS OTHERWISE NOTED.

9. SCREENED IMAGES SHOW EXISTING CONDITIONS. WHERE EXISTING CONDITIONS LIE UNDER OR ARE IMPINGED UPON BY PROPOSED BUILDINGS AND/OR SITE ELEMENTS, THE EXISTING CONDITION WILL BE REMOVED, ABANDONED AND/OR CAPPED OR DEMOLISHED AS REQUIRED.

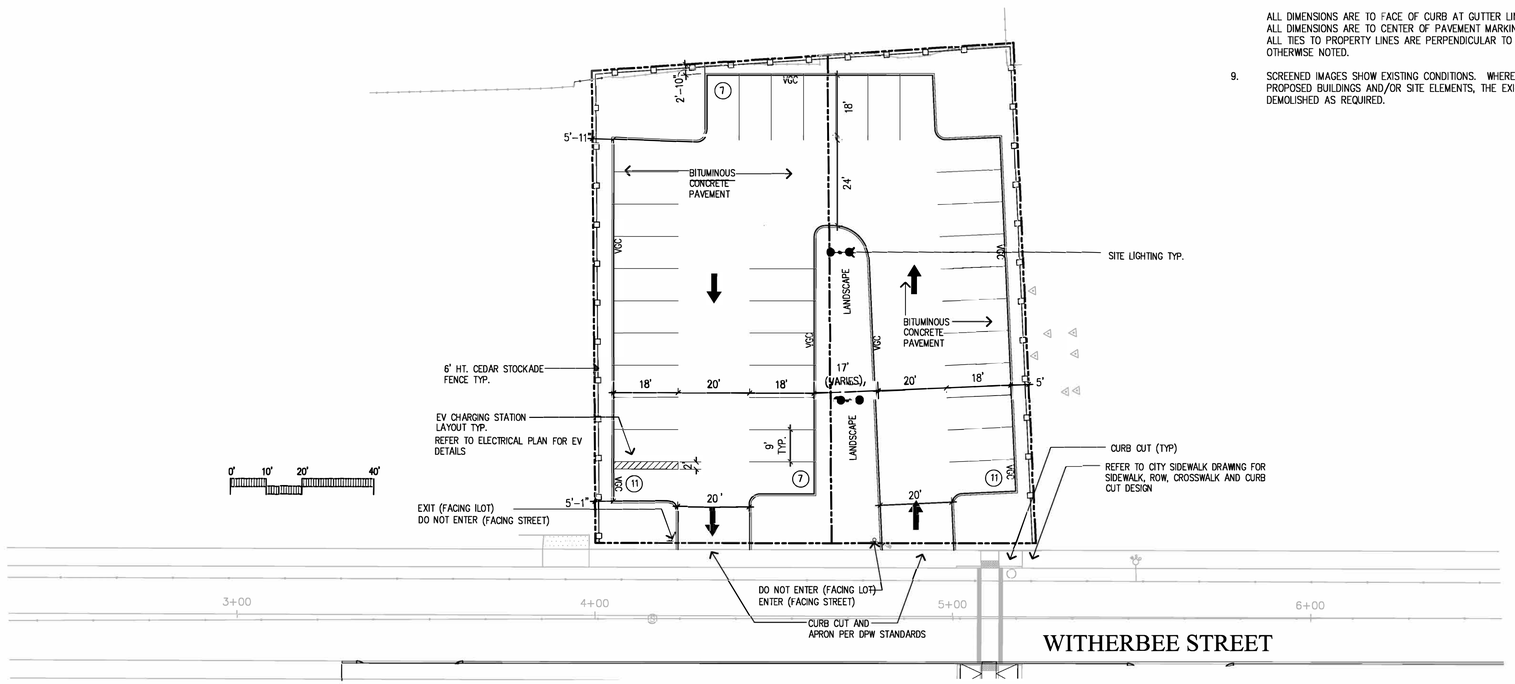

LEGEND

— — — —	PROPERTY LINE
●→ ◉	SITE LIGHTING
VGC	VERTICAL GRANITE CURB

DZ I
Land Planning, Civil Engineering, Landscape Architecture
Po Box 307
Foxborough, MA
www.develliszrein.com
tel. 508.393.8583
DeVellis Zrein Inc.

LAYOUT AND MATERIALS PLAN

SCALE:	1"-20"
JOB:	2GIS-535
FILE:	
DRAWN:	JJD / CM
CHECKED:	TOG
DATE:	08-21-23

C-1

WITHERBEE STREET PARKING LOT

MARLBOROUGH, MA

GRADING AND UTILITY NOTES

1. EXISTING CONDITIONS INFORMATION IS REPRODUCED FROM THE SURVEY PREPARED BY THE CITY OF MARLBOROUGH DPW.
2. PRIOR TO THE START OF ANY EXCAVATION FOR THE PROJECT, BOTH ON AND OFF THE SITE, THE CONTRACTOR SHALL NOTIFY DIGSAFE AND BE PROVIDED WITH A DIGSAFE NUMBER INDICATING THAT ALL EXISTING UTILITIES HAVE BEEN LOCATED AND MARKED.
3. CONTRACTOR TO ADJUST UTILITY ELEMENT MEANT TO BE FLUSH WITH GRADE (CLEAN-OUTS, UTILITY MANHOLES, CATCH BASINS, INLETS, ETC.) THAT IS AFFECTED BY SITE WORK OR GRADE CHANGES, WHETHER SPECIFICALLY NOTED ON PLANS OR NOT.
4. ALL CONSTRUCTION TO BE DONE IN ACCORDANCE WITH CITY OF MARLBOROUGH STANDARDS.
5. ALL WORK TO BE DONE WITHIN PUBLIC RIGHT-OF-WAYS SHALL CONFORM TO THE REQUIREMENTS AND SPECIFICATIONS OF THE CITY OF MARLBOROUGH.
6. THE LOCATIONS OF EXISTING UNDERGROUND UTILITIES ARE SHOWN IN AN APPROXIMATE WAY ONLY AND HAVE NOT BEEN INDEPENDENTLY VERIFIED BY THE OWNER OR ITS REPRESENTATIVE. THE CONTRACTOR SHALL DETERMINE THE EXACT LOCATION OF ALL EXISTING UTILITIES BEFORE COMMENCING WORK, AND AGREES TO BE FULLY RESPONSIBLE FOR ANY AND ALL DAMAGES WHICH MAY BE OCCASIONED BY THE CONTRACTOR'S FAILURE TO EXACTLY LOCATE AND PRESERVE ALL UNDERGROUND UTILITIES.
7. WHERE AN EXISTING UTILITY IS FOUND TO CONFLICT WITH THE PROPOSED WORK, THE LOCATION, ELEVATION, AND SIZE OF THE UTILITY SHALL BE ACCURATELY DETERMINED WITHOUT DELAY BY THE CONTRACTOR, AND THE INFORMATION FURNISHED TO THE ENGINEER FOR RESOLUTION OF THE CONFLICT.
8. THE CONTRACTOR SHALL ALTER THE MASONRY OF THE TOP SECTION OF ALL EXISTING DRAINAGE STRUCTURES AS NECESSARY FOR CHANGES IN GRADE, AND RESET ALL WATER AND DRAINAGE FRAMES, GRATES, AND BOXES TO THE PROPOSED FINISH SURFACE GRADE.
9. THE CONTRACTOR SHALL MAKE ALL ARRANGEMENTS FOR THE ALTERATION AND ADJUSTMENT OF ALL GAS, ELECTRIC, TELEPHONE, AND ANY OTHER PRIVATE UTILITIES BY THE UTILITY COMPANIES.
10. CONTRACTOR SHALL MAINTAIN, OR ADJUST TO NEW FINISH GRADE, AS NECESSARY ALL UTILITY AND SITE STRUCTURES SUCH AS: LIGHT POLES, SIGN POLES, MANHOLES, CATCH BASINS, HAND HOLES, WATER AND GAS GATES, HYDRANTS, ETC., FROM MAINTAINED UTILITY AND SITE SYSTEMS, UNLESS OTHERWISE NOTED OR DIRECTED BY OWNER'S REPRESENTATIVE.
11. SITE LIGHTING IS SHOWN ON THIS PLAN FOR COORDINATION PURPOSES ONLY. REFER TO ELECTRICAL PLANS FOR EXACT TYPE AND LOCATION.
13. REFER TO ELECTRICAL PLANS FOR SECTIONS AND DETAILS OF THE UTILITY DUCT BANK.
14. AREAS OUTSIDE THE LIMITS OF PROPOSED WORK DISTURBED BY THE CONTRACTOR'S OPERATIONS SHALL BE RESTORED BY THE CONTRACTOR TO THEIR ORIGINAL CONDITION, AT THE CONTRACTOR'S EXPENSE.
15. THE LOCATION, SIZE, DEPTH, AND SPECIFICATIONS FOR CONSTRUCTION OF PRIVATE UTILITY SERVICES SHALL BE INSTALLED ACCORDING TO THE REQUIREMENTS PROVIDED BY, AND APPROVED BY, THE RESPECTIVE UTILITY COMPANY (GAS, TELEPHONE, ELECTRICAL.). THE CONTRACTOR SHALL COORDINATE THE INSTALLATION OF THE UTILITY CONNECTIONS WITH THE RESPECTIVE COMPANIES PRIOR TO ANY UTILITY CONSTRUCTION.
16. PROTECT AND MAINTAIN EXISTING ON-SITE DRAINAGE STRUCTURES AND PIPES UNLESS OTHERWISE NOTED.
17. WHERE PROPOSED GRADES MEET EXISTING GRADES, CONTRACTOR SHALL BLEND GRADES TO PROVIDE A SMOOTH TRANSITION BETWEEN EXISTING AND NEW WORK. PONDING AT TRANSITION AREAS WILL NOT BE ALLOWED.
18. CONTRACTOR SHALL MAINTAIN POSITIVE DRAINAGE AWAY FROM ALL BUILDING FOUNDATIONS, STRUCTURES AND PLANTING BEDS.
19. MAXIMUM SLOPE IN DISTURBED AREAS SHALL NOT EXCEED 3:1, UNLESS OTHERWISE NOTED.
20. ENSURE ALL EXISTING (TO REMAIN), AND PROPOSED MANHOLE COVERS PROPERLY IDENTIFY UTILITY SERVICED.
21. CONTRACTOR SHALL VERIFY EXISTING GRADES AND NOTIFY OWNER'S REPRESENTATIVE OF ANY DISCREPANCIES.
22. BITUMINOUS CONCRETE ELEVATIONS AT CATCH BASINS TO BE 1/4 INCH ABOVE RIM ELEVATION SHOWN FOR CATCH.
23. SCREENED IMAGES SHOW EXISTING CONDITIONS. WHERE EXISTING CONDITIONS LIE UNDER OR ARE IMPINGED UPON BY PROPOSED BUILDINGS AND/OR SITE ELEMENTS, THE EXISTING CONDITION WILL BE REMOVED, ABANDONED AND/OR CAPPED OR DEMOLISHED AS REQUIRED.

GRADING LEGEND

	PROPERTY LINE
110	CONTOUR LINE
+100.50	SPOTGRADE
WQ	WATER QUALITY STRUCTURE
	DRAIN MANHOLE
CO	CLEANOUT
	DRAIN LINE
HH	HANDHOLE
	ELECTRICAL CONDUIT

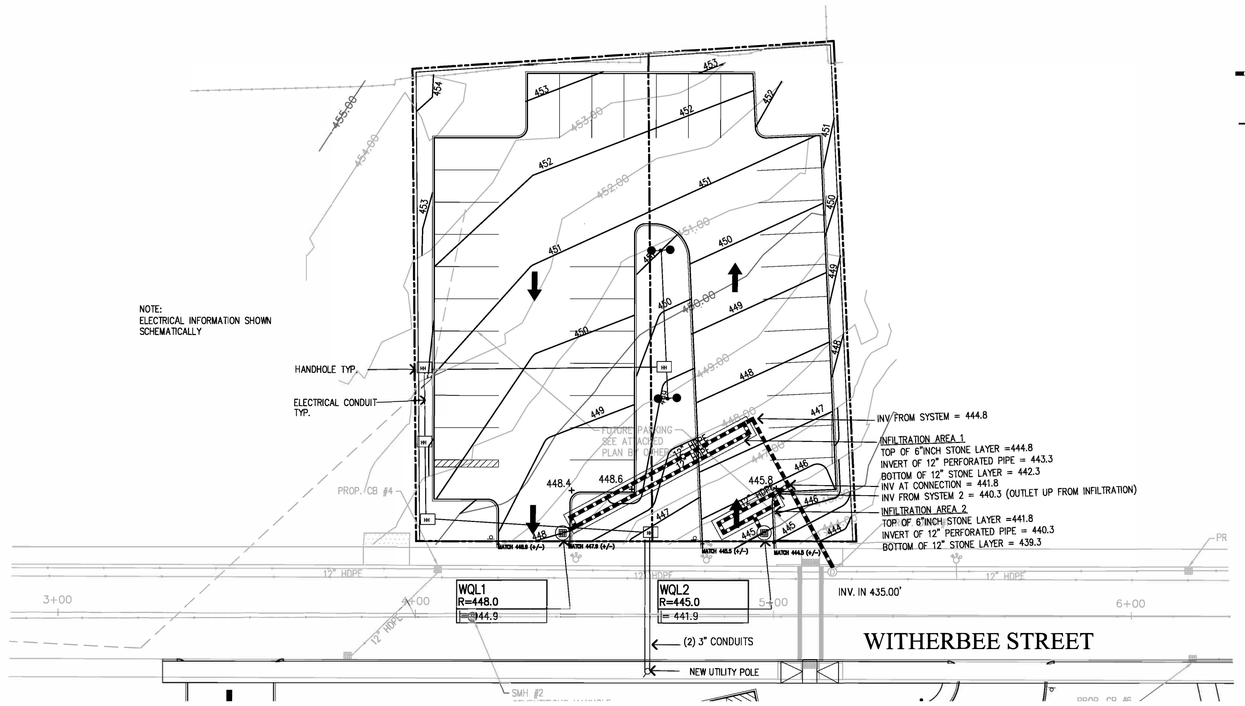

DZ I
Land Planning, Civil Engineering, Landscape Architecture
Po Box 307
Foxborough, MA
www.develliszrein.com
tel. 508.393.8583
DeVellis Zrein Inc.

GRADING AND UTILITY PLAN

SCALE:	1"-20"
JOB:	2GIS-535
FILE:	
DRAWN:	JJD / CM
CHECKED:	TOG
DATE:	08-21-23

C-2

(ref G:\Users\Catherine\Documents\Sync\Marlborough Library\dwg\tblock.dwg

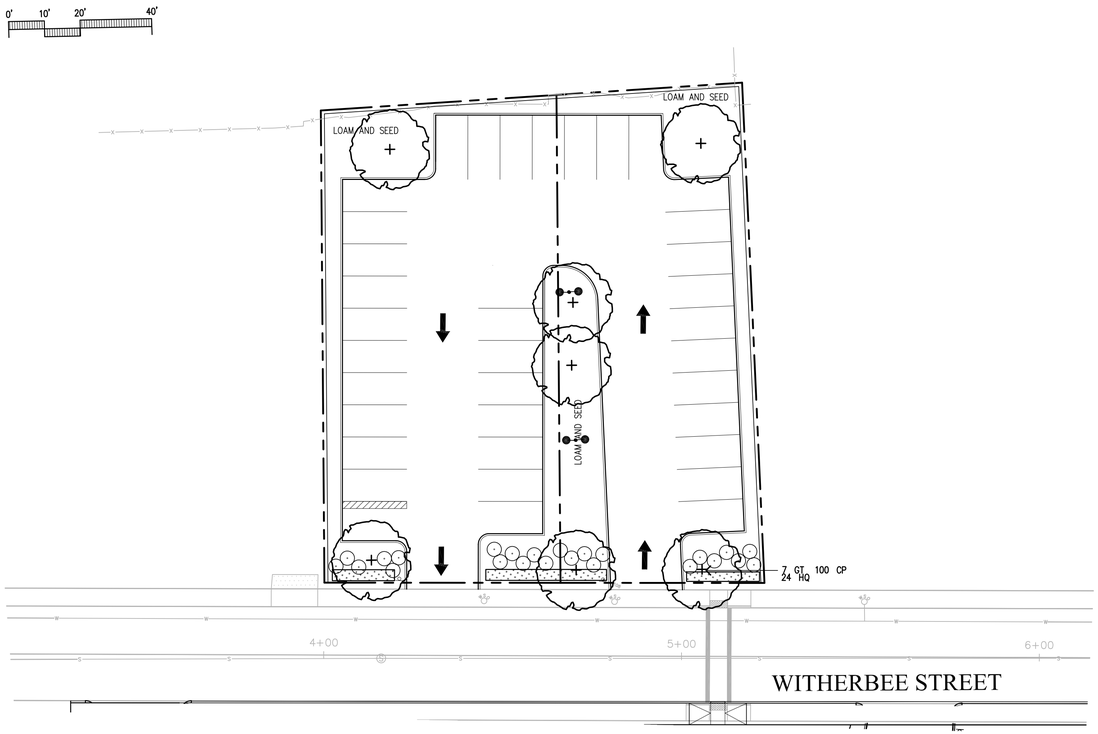

PLANTING NOTES

1. EXISTING CONDITIONS INFORMATION IS REPRODUCED FROM THE SURVEY PREPARED BY THE CITY OF MARLBOROUHGH DPW, MA,
2. THE LOCATIONS OF UNDERGROUND UTILITIES SHOWN ARE BASED ON THE SURVEY REFERENCED ABOVE. THE CONTRACTOR SHALL CONTACT DIGSAFE AND THE PROPER LOCAL AUTHORITIES OR RESPECTIVE UTILITY COMPANIES TO CONFIRM THE LOCATION OF ALL EXISTING UTILITIES BEFORE COMMENCING WORK. ANY DAMAGE DUE TO FAILURE OF THE CONTRACTOR TO CONTACT THE PROPER AUTHORITIES SHALL BE BORNE BY THE CONTRACTOR.
3. CONTRACTOR SHALL BEGIN MAINTENANCE IMMEDIATELY AFTER PLANTING AND WILL CONTINUE UNTIL FINAL WRITTEN ACCEPTANCE OF PLANT MATERIAL.
4. LANDSCAPE ARCHITECT TO FLAG ALL TREES TO BE TRANSPLANTED PRIOR TO CONSTRUCTION START.
5. CONTRACTOR SHALL VERIFY ALL TREE REMOVALS AND/OR TRANSPLANTS WITH OWNER'S REPRESENTATIVE PRIOR TO CONSTRUCTION START.
6. CONTRACTOR SHALL MAINTAIN POSITIVE DRAINAGE AWAY FROM ALL BUILDING FOUNDATIONS, STRUCTURES, AND PLANTING BEDS.
7. MAXIMUM SLOPE WITHIN DISTURBED AREAS SHALL NOT EXCEED 3:1, UNLESS OTHERWISE NOTED.
8. THE LANDSCAPE CONTRACTOR SHALL SUPPLY ALL PLANT MATERIALS IN QUANTITIES SUFFICIENT TO COMPLETE ALL PLANTINGS SHOWN ON THIS DRAWING.
9. ALL MATERIALS SHALL CONFORM TO THE GUIDELINES ESTABLISHED BY THE AMERICAN NURSERY AND LANDSCAPE ASSOCIATION.
10. ALL PLANTS SHALL BEAR THE SAME RELATIONSHIP TO FINISH GRADE AS TO ORIGINAL GRADES BEFORE DIGGING.
11. ALL PLANTS TO BE BALLED IN BURLAP OR CONTAINERIZED.
12. MULCH FOR PLANTED AREAS TO BE AGED PINE BARK: PARTIALLY DECOMPOSED, DARK BROWN IN COLOR AND FREE OF WOOD CHIPS THICKER THAN 1/4 INCH.
13. PLANTING SOIL MIX: LOAM THOROUGHLY INCORPORATED WITH ROTTED MANURE PROPORTIONED 5 C.Y. TO 1 C.Y. OR EQUIVALENT. FERTILIZER ADDED PER RECOMMENDED RATES OF SOILS ANALYSIS.
14. THE LANDSCAPE CONTRACTOR SHALL GUARANTEE ALL PLANT MATERIALS FOR ONE (1) FULL YEAR FROM DATE OF ACCEPTANCE.
15. ALL PLANT MATERIALS ARE SUBJECT TO THE APPROVAL OF THE LANDSCAPE ARCHITECT, AT THE NURSERY, AND AT THE SITE.
16. ALL AREAS OF THE SITE WHICH HAVE BEEN DISTURBED AND NOT OTHERWISE DEVELOPED SHALL BE LOAMED AND SEEDED WITH A MINIMUM DEPTH OF 6" DEPTH TOPSOIL.
17. PLANT SPECIES AS INDICATED IN THE PLANT LIST ARE SUGGESTIONS ONLY. FINAL SELECTION OF SPECIES SHALL OCCUR AT THE TIME OF PLANT PURCHASE, DEPENDING ON AVAILABILITY. PLANT SIZE AND QUANTITY SHALL NOT CHANGE WITHOUT APPROVAL OF OWNER'S REPRESENTATIVE.

PLANT SCHEDULE

SYMBOL	BOTANICAL NAME	COMMON NAME	QTY	SIZE	COMMENT
DECIDUOUS TREES					
GT	GLEDITSIA TRIACANTHOS 'INERMIS'	THORNLESS HONEYLOCUST	7	3 –3 1/2" CAL.	
HQ	HYDRANGEA QUERICIFOLIA 'ALICE'	ALICE OAK LEAF HYDRANGEA	8	24/36" HT.	
CP	CAREX PENNSYLVANICA	COMMON SEDGE	1500	4" POTS	

WITHERBEE STREET PARKING LOT

MARLBOROUGH, MA

DZ I
Land Planning, Civil Engineering, Landscape Architecture
Po Box 307
Foxborough, MA
www.devellisz rein.com
tel. 508.393.8583
DeVellis Zrein Inc.

PLANTING PLAN

SCALE:	1"=20"
JOB:	2GIS-535
FILE:	
DRAWN:	JJD / CM
CHECKED:	TOG
DATE:	08-21-23

C-3

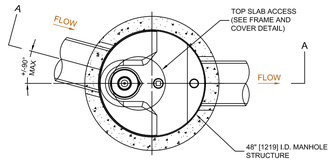

PLAN VIEW
TOP SLAB NOT SHOWN

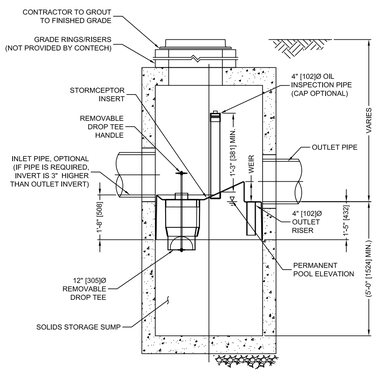

WATER QUALITY UNIT (STORMCEPTOR 450I) (OR EQUAL)

REFER TO MANUFATURERS GENERAL NOTES AND INSTALL GUIDE

GENERAL NOTES

1. CONTECH TO PROVIDE ALL MATERIALS UNLESS NOTED OTHERWISE.
2. FOR SITE SPECIFIC DRAWINGS WITH DETAILED STRUCTURE DIMENSIONS AND WEIGHT, PLEASE CONTACT YOUR CONTECH ENGINEERED SOLUTIONS LLC REPRESENTATIVE. www.ContechES.com
3. STORMCEPTOR WATER QUALITY STRUCTURE SHALL BE IN ACCORDANCE WITH ALL DESIGN DATA AND INFORMATION CONTAINED IN THIS DRAWING. CONTRACTOR TO CONFIRM STRUCTURE MEETS REQUIREMENTS OF PROJECT.
4. STORMCEPTOR STRUCTURE SHALL MEET AASHTO HS20 LOAD RATING, ASSUMING EARTH COVER OF 0' - 2' [610], AND GROUNDWATER ELEVATION AT, OR BELOW, THE OUTLET PIPE INVERT ELEVATION. ENGINEER OF RECORD TO CONFIRM ACTUAL GROUNDWATER ELEVATION. CASTINGS SHALL MEET AASHTO M306 AND BE CAST WITH THE CONTECH LOGO.
5. STORMCEPTOR STRUCTURE SHALL BE PRECAST CONCRETE CONFORMING TO ASTM C478 AND AASHTO LOAD FACTOR DESIGN METHOD.
6. ALTERNATE UNITS ARE SHOWN IN MILLIMETERS [mm].

INSTALLATION NOTES

A. ANY SUB-BASE, BACKFILL DEPTH, AND/OR ANTI-FLOTATION PROVISIONS ARE SITE-SPECIFIC DESIGN CONSIDERATIONS AND SHALL BE SPECIFIED BY ENGINEER OF RECORD.
B. CONTRACTOR TO PROVIDE EQUIPMENT WITH SUFFICIENT LIFTING AND REACH CAPACITY TO LIFT AND SET THE STORMCEPTOR MANHOLE STRUCTURE.
C. CONTRACTOR TO INSTALL JOINT SEALANT BETWEEN ALL STRUCTURE SECTIONS AND ASSEMBLE STRUCTURE.
D. CONTRACTOR TO PROVIDE, INSTALL, AND GROUT INLET AND OUTLET PIPE(S). MATCH PIPE INVERTS WITH ELEVATIONS SHOWN. ALL PIPE CENTERLINES TO MATCH PIPE OPENING CENTERLINES.
E. CONTRACTOR TO TAKE APPROPRIATE MEASURES TO ASSURE UNIT IS WATER TIGHT, HOLDING WATER TO FLOWLINE INVERT MINIMUM. IT IS SUGGESTED THAT ALL JOINTS BELOW PIPE INVERTS ARE GROUTED.

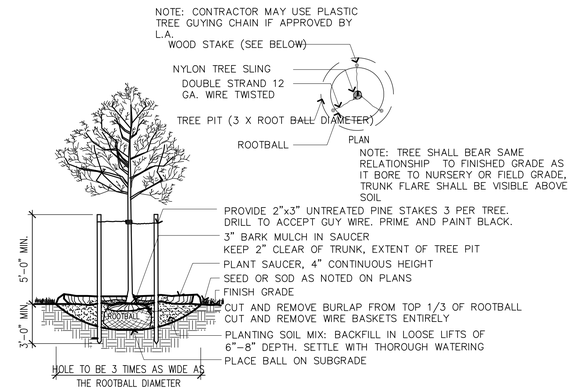

DECIDUOUS TREE PLANTING

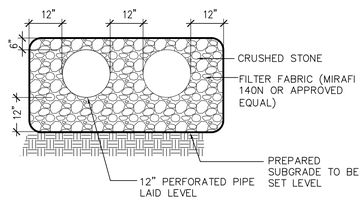

UNDERGROUND RECHARGE SYSTEM

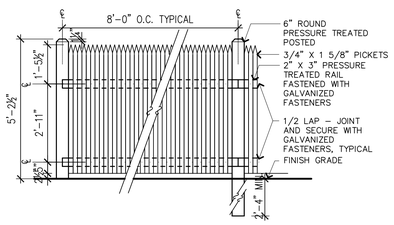

6' HT. STOCKADE FENCE

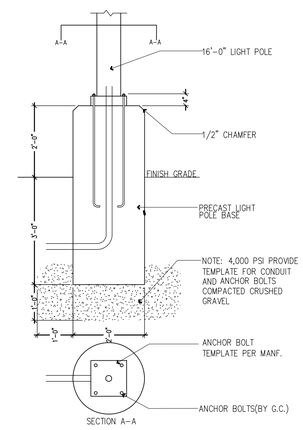

LIGHT POLE BASE

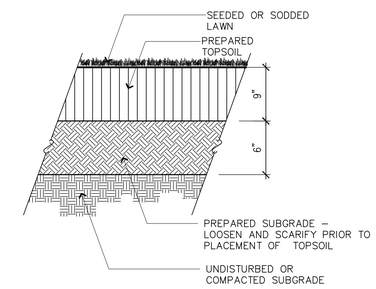

LOAM AND SEED PLANTING

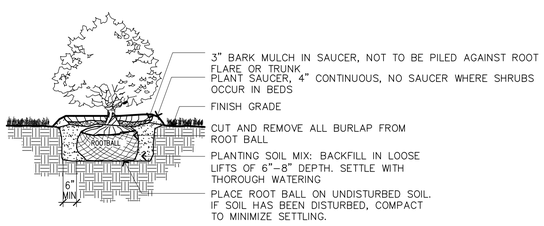

NOTES
1. SHRUB SHALL BEAR SAME RELATIONSHIP TO FINISHED GRADE AS IT BORE TO NURSERY OR FIELD GRADE

SHRUB PLANTING

WITHERBEE STREET PARKING LOT

MARLBOROUGH, MA

DZ I
Land Planning, Civil Engineering, Landscape Architecture
Po Box 307
Foxborough, MA
www.develliszrein.com
tel. 508.393.8583
DeVellis Zrein Inc.

SITE DETAILS

SCALE: 1"-20"	C-4
JOB: 2GIS-535	
FILE:	
DRAWN: JJD / CM	
CHECKED: TOG	
DATE: 08-21-23	