TABLE OF BEARING AREAS IN SQUARE FEET AGAINST UNDISTURBED MATERIAL FOR WATER MAIN FITTINGS			
SIZE OF MAIN (IN.)	45° BEND (S.F.)	TEES & PLUGS	22 1/2° BEND
8" & LESS	8	10	8
10" – 12"	22	16	13

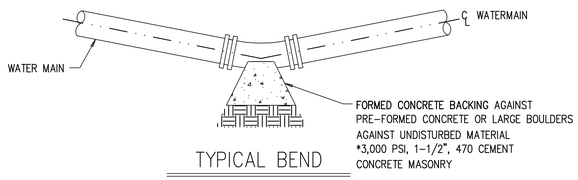

TYPICAL BEND

N.T.S.

NOTES:

1. PROVIDE RESTRAINTS FOR MECHANICAL JOINTS (MEGALUGS OR FRICTION CLAMPS).
2. 6 MIL POLYETHYLENE SHALL BE PLACE BETWEEN THE THRUST BLOCK AND PIPE AT ALL MECHANICAL JOINTS PRIOR TO PORING CONCRETE.

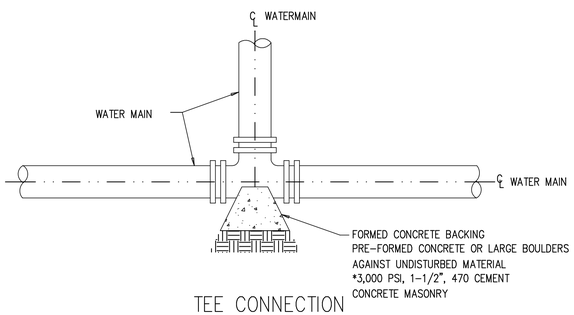

TEE CONNECTION

N.T.S.

NOTES:

1. PROVIDE RESTRAINTS FOR MECHANICAL JOINTS (MEGALUGS OR FRICTION CLAMPS).
2. 6 MIL POLYETHYLENE SHALL BE PLACE BETWEEN THE THRUST BLOCK AND PIPE AT ALL MECHANICAL JOINTS PRIOR TO PORING CONCRETE.

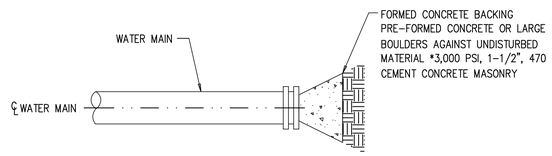

TYPICAL PLUG

N.T.S.

NOTES:

1. PROVIDE RESTRAINTS FOR MECHANICAL JOINTS (MEGALUGS OR FRICTION CLAMPS).
2. 6 MIL POLYETHYLENE SHALL BE PLACE BETWEEN THE THRUST BLOCK AND PIPE AT ALL MECHANICAL JOINTS PRIOR TO PORING CONCRETE.

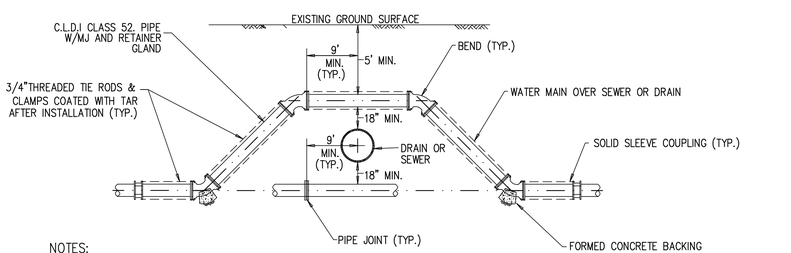

NOTES:

1. BENDS TO BE UTILIZED ONLY WHEN DEFLECTION CANNOT ACHIEVE REQUIRED DEPTH.
2. ALL VERTICAL BENDS ARE TO BE RODDED W/ MEGA LUGS OR FRICTION CLAMPS AT BELL JOINTS.
3. THE UTILITY WHICH LIES BELOW ANOTHER UTILITY SHALL BE SLEEVED IN A CEMENT LINED DUCTILE IRON PIPE THAT IS 4 INCHES LARGER IN DIAMETER AND FURNCO BOOTED AT EITHER END, OR ENCASED WITH EXCAVATABLE FLOWABLE FILL. THE EXACT METHOD IS TO BE DETERMINED BY THE CITY.
4. 6 MIL POLYETHYLENE SHALL BE PLACE BETWEEN THE THRUST BLOCK AND PIPE AT ALL MECHANICAL JOINTS PRIOR TO PORING CONCRETE.

WATER MAIN CROSSING WITH SEWER OR DRAIN

N.T.S.

WATER NOTES

THE FOLLOWING DESCRIBES MATERIALS AND METHODS OF INSTALLATION OF WATER MAINS IN GENERAL. ALL WORK SHALL CONFORM TO THE 1988 STANDARD SPECIFICATIONS FOR HIGHWAYS AND BRIDGES, ALL SUBSEQUENT SUPPLEMENTAL SPECIFICATIONS IN THE PARTICULAR CONTRACT AND IN ACCORDANCE WITH THE MOST RECENT A.W.W.A STANDARDS.

MAIN INSTALLATION

ALL MAINS WILL BE A MINIMUM OF EIGHT INCH DUCTILE IRON PIPE, CLASS 52, CEMENT LINED MECHANICAL JOINT OR PUSH–ON JOINT IN ACCORDANCE WITH A.W.W.A. STANDARDS. ALL MAINS OVER EIGHT (8) INCHES IN DIAMETER WILL BE DUCTILE IRON CLASS 52, INCLUDING NIPPLE PIECES. ALL HYDRANT BRANCHES SHALL BE SIX (6) INCH DUCTILE IRON CLASS 52. ALL INTERSECTIONS OF MAINS WILL BE GATED IN THEIR RESPECTIVE DIRECTIONS. NO MAIN GATE WILL EXTEND OVER ONE THOUSAND (1,000) FEET OF EACH OTHER OR SO SPACED AT THE DIRECTION OF THE DEPARTMENT OF PUBLIC WORKS OR FIRE CHIEF. ALL HYDRANTS WILL BE GATED. ALL TAPS TO THE EXISTING PUBLIC SYSTEM WILL SPECIFY A TAPPING SLEEVE AND GATE VALVE. EXCAVATION WILL BE TO A DEPTH THAT PROVIDES A MINIMUM OF FIVE (5) FEET OF COVER OVER THE PIPE. IF THE EXCAVATION IS IN LEDGE, A MINIMUM OF 12 INCH SPACING AROUND THE PIPE WILL BE REQUIRED TO ALLOW FOR SELECTED BACKFILL MATERIAL (SEE TRENCHING DETAILS). IT WILL BE AT THE DISCRETION OF THE DEPARTMENT OF PUBLIC WORKS AS TO THE TYPE OF BEDDING USED AND WILL DEPEND ON THE FIELD CONDITIONS. IN ANY EVENT, IT WILL BE EITHER CRUSHED BANK GRAVEL, SAND BORROW, OR THREE–FOURTHS INCH STONE. NO STONES LARGER THAN THREE (3) INCHES IN DIAMETER MAY BE USED WITHIN THE FIRST FOOT OF BACKFILL OVER THE PIPE. ONCE THE PIPE HAS SUFFICIENT COVER WITH THE SELECTED MATERIAL, NORMAL BACKFILLING MAY PROCEED WITH CARE. JOINTING OF PUSH–ON OR TYTON JOINT CAST IRON WILL BE WITH THE USE OF A COME–ALONG OR BAR. IF A BAR IS USED A BLOCK OF WOOD WILL BE USED BETWEEN IT AND THE PIPE; THE SAME APPLIES FOR HAVING A BACKHOE/EXCAVATOR SET LARGER DIAMETER PIPE, A BLOCK OF WOOD WILL BE INSERTED BETWEEN THE BUCKET AND THE PIPE; IN NO EVENT WILL THERE BE A METAL–TO–METAL DRIVING FORCE TO SET THE PIPE. IF THIS IS NOT STRICTLY COMPLIED WITH THE LENGTH OF THE PIPE WILL BE REMOVED AND A NEW ONE USED IN ITS PLACE.

MAIN GATE VALVES AND BOXES

MAIN GATE VALVES SHALL BE OPEN RIGHT, DUCTILE IRON BODY, RESILIENT WEDGE DESIGN AS MANUFACTURED BY MUELLER CO. OR APPROVED EQUAL. MAIN GATE BOXES SHALL BE CAST–IRON, SLIDE TYPE WITH AT LEAST SIX (6) INCHES OF ADJUSTMENT AND AT LEAST FIVE (5) FEET LONG. THE COVERS SHALL BE FLUSH, CLOSE–FITTING WITH THE LETTER "W" OR THE WORD "WATER" CAST INTO THE COVER.

MAIN LINE TAPS

MAIN LINE TAPS WILL ALWAYS BE DONE WITH THE USE OF TAPPING SLEEVE AND GATE VALVE. THE TAPPING SLEEVE TO BE MUELLER OR APPROVED EQUAL. IF THE CONTRACTOR IS TO MAKE THE TAP ON THEIR OWN, THEY MUST FURNISH EVIDENCE OF THEIR COMPETENCE THROUGH PREVIOUS WORK AND HAVE THE NECESSARY TOOLS TO PERFORM THE WORK SATISFACTORILY.

THRUST BLOCKS

ALL PLUGS, CAPS, TEES, BENDS AND HYDRANTS SHALL BE PROVIDED WITH A CONCRETE THRUST BLOCK TO PREVENT MOVEMENT. THE THRUST BLOCK SHALL CONSIST OF A FORMED CONCRETE BACKING AGAINST UNDISTURBED MATERIAL, POURED IN PLACE WITH 3,000 PSI, 1–1/2", 470 CEMENT CONCRETE MASONRY. THE CONTRACTOR IS TO INSTALL A 6MIL POLYETHYLENE BARRIER BETWEEN THE THRUST BLOCK AND DUCTILE IRON AT ALL MECHANICAL JOINTS PRIOR TO POURING CONCRETE.

INSPECTIONS

INSPECTION WILL BE PROVIDED BY THE CITY OF MARLBOROUGH WATER AND SEWER INSPECTOR. BEFORE ANY BACKFILLING IS DONE, THE DEPARTMENT OF PUBLIC WORKS WATER DIVISION WILL BE NOTIFIED TWENTY–FOUR (24) HOURS IN ADVANCE, AND AN INSPECTOR WILL INSPECT THE COMPLETED WORK. THIS METHOD OF OPERATION WILL BE USED FOR HYDRANT INSTALLATION, MAIN TAPS, SERVICE TAPS, TESTING, ETC. IF THE DEPARTMENT OF PUBLIC WORKS FEELS THAT INSUFFICIENT WORKMANSHIP AND CARE IS BEING TAKEN IN THE INSTALLATION, THIS WORK MAY BE TERMINATED UNTIL FURTHER APPROVAL FROM THE CITY ENGINEER.

SERVICE CONNECTIONS

SERVICE CONNECTIONS SHALL HAVE A MINIMUM SIZE OF THREE–FOURTHS (3/4) INCH IN DIAMETER. ALL OPEN CUT INSTALLATION SERVICE PIPES SHALL BE HIGH–DENSITY POLYETHYLENE (HDPE) TUBING, BLUE IN COLOR, COPPER TUBE SIZE (CTS), SDR 9. ALL TRENCHLESS INSTALLATION SERVICE PIPES SHALL BE TYPE K COPPER TUBING. ANY SERVICE PIPE LARGER THAN TWO (2) INCHES SHALL BE CEMENT LINED DUCTILE IRON CLASS 52, CEMENT LINED MECHANICAL JOINT OR PUSH–ON JOINT IN ACCORDANCE WITH A.W.W.A STANDARDS. ALL NEW MAIN CONNECTIONS WILL BE MADE BY WAY OF DIRECT WET TAP. THE USE OF A TWO–STRAP CORPORATION SADDLE SHALL ONLY BE USED WITH APPROVAL OF ENGINEER (TYPE, SMITH–BLAIR OR MUELLER) AND IF A REPAIR SADDLE (TYPE, SMITH BLAIR). A CURB STOP SHALL BE (CTS) THREAD, OPEN RIGHT W/ STOP, AS MANUFACTURED BY FARNUM OR MUELLER. ANY SERVICE ONE (1) INCH OR GREATER SHALL EMPLOY AN ORISEAL CURB WITH WITH STOP. THE SERVICE SHALL BE INSTALLED AT 90° FROM THE ROAD, UNLESS OTHERWISE APPROVED BY THE DEPARTMENT OF PUBLIC WORKS. UNDER NO CIRCUMSTANCES WILL ANY INVERTED KEY CURBS BE INSTALLED IN ANY WATER SYSTEM IN THE CITY OF MARLBOROUGH. THE SERVICE BOX FOR SERVICES UP TO TWO (2) INCHES SHALL BE FOUR–AND–ONE–HALF (4 ½) TO FIVE–AND–ONE–HALF (5 ½) FEET, EXTENSION–TYPE, THREE–FOURTHS INCH ROD, AND COVER TO BE WITH COUNTER SUNK ONE INCH BRASS PLUG TAPPED FOR ONE INCH IRON PIPE. THE SERVICE BOX FOR TWO (2) INCH SERVICES SHALL BE TWO–AND–ONE–HALF (2 ½) BUFFALO STYLE BOX SLIDE TYPE WITH SERVICE BOX FOOT PIECE. MINIMUM COVER FOR SERVICES SHALL BE FIVE (5) FEET ZERO (0) INCHES. A SAND BACKFILL MATERIAL WILL BE CAREFULLY PLACED AROUND THE SERVICE PIPE TO PROTECT IT FROM NORMAL BACKFILL AND COMPACTION.

TESTING

THE CONTRACTOR SHALL FURNISH A WATER METER PRESSURE GAUGE, TESTING PLUGS, PUMPS, PIPE CONNECTIONS AND OTHER REQUIRED APPARATUS APPROVED BY THE CITY. THE SECTION OF PIPE TO BE TESTED WILL BE COMPLETELY FILLED WITH WATER AND AIR BLOWN OFF THROUGH A HIGH POINT, SUCH AS A HYDRANT. THE SECTION UNDER TEST WILL BE MAINTAINED FULL AND UNDER PRESSURE AT 200 LBS. FOR A PERIOD OF ONE (1) HOUR. THE LINE SHALL BE FILLED AND TESTED WITHIN ONE (1) TO THREE (3) DAYS AFTER FILLING. ANY FAILURE OF THE VARIOUS PIPELINES, STRUCTURES, VALVES, HYDRANTS AND RELATED ACCESSORIES THAT OCCURS BEFORE FINAL ACCEPTANCE OF THE WORK SHALL BE REPLACED AT THE EXPENSE OF THE CONTRACTOR. A SUCCESSFUL WATER PRESSURE TEST IS NOT TO BE INTERPRETED AS FINAL ACCEPTANCE. THE PRESSURE AND LEAKAGE TEST SHALL CONSIST OF FIRST RAISING THE WATER PRESSURES (BASED ON THE ELEVATION) TO A PRESSURE IN POUNDS PER SQUARE INCH NUMERICALLY EQUAL TO THE PRESSURE RATING OF THE PIPE. WHILE MAINTAINING THIS PRESSURE, THE CONTRACTOR SHALL MAKE A LEAKAGE TEST BY METERING THE FLOW OF WATER INTO THE PIPE. IF THE AVERAGE LEAKAGE DURING A TWO–HOUR PERIOD EXCEEDS A RATE OF TEN (10) GALLONS PER INCH OF DIAMETER PER TWENTY–FOUR (24) HOURS PER MILE OF PIPELINE, THE SECTION WILL BE CONSIDERED AS HAVING FAILED THE TEST. AFTER TESTING THE PIPELINE IS TO BE DISINFECTED WITH A CHLORINE CONCENTRATION OF APPROXIMATELY FIFTY (50) PARTS PER MILLION PRIOR TO BEING PLACED IN SERVICE. THE INTRODUCTION OF THIS CHLORINE SHALL BE ACCOMPLISHED BY PUMPING OR SIPHONING A CALCIUM HYDROCHLORIDE SOLUTION INTO THE MAIN. THE CHLORINATION WATER IS TO REMAIN IN THE NEW PIPELINE FOR A PERIOD OF TWENTY–FOUR (24) HOURS. DURING THIS PERIOD, PROPER PRECAUTIONS ARE TO BE TAKEN TO PREVENT THIS CHLORINATED WATER FROM FLOWING BACK INTO THE EXISTING SYSTEM. AFTER CHLORINATION AND DE–CHLORINATION A MINIMUM OF (2) BACTERIA SAMPLES ARE TO BE TAKEN TWENTY–FOUR (24) HOURS APART BY AN INDEPENDENT TESTING FIRM HIRED BY THE CONTRACTOR THAT SPECIALIZES IN WATER LINE TESTING AND DISINFECTIONS OF WATER DISTRIBUTION SYSTEMS APPROVED BY THE CITY ENGINEER. ALL TESTING SHALL BE PERFORMED IN THE PRESENCE OF THE CITY REPRESENTATIVE AND ANY TESTS PERFORMED IN THE ABSENCE OF THE CITY REPRESENTATIVE SHALL BE CONSIDERED INVALID AND SHALL BE REPEATED AT THE CONTRACTOR'S EXPENSE.

CITY OF MARLBOROUGH
DEPARTMENT OF PUBLIC WORKS
Engineering Division
135 Neil Street
Marlborough, MA 01752
p. (508) 624-6910
f. (508) 624-7699
www.marlborough-ma.gov

REVISIONS

No.	Date	Description
1.		

Drawn By:	Designed By:	Checked By:	Approved By:
ENG	ENG	ENG	ENG

Project Title:

Sheet Title:

WATER DETAILS

Contract No: N/A	Sheet No.: 1
Date: 4/29/15	
Scale: N.T.S.	

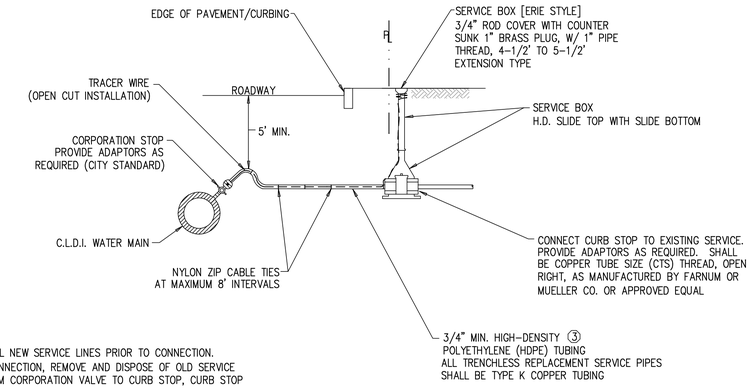

NOTES:

1. FLUSH ALL NEW SERVICE LINES PRIOR TO CONNECTION.
2. UPON CONNECTION, REMOVE AND DISPOSE OF OLD SERVICE LINE FROM CORPORATION VALVE TO CURB STOP, CURB STOP AND BOX.
3. HDPE TUBING, TRACER WIRE, CORPORATION STOP AND CURB STOP STOP TO BE ENCASE IN 12" MIN. SAND.
4. ALL FITTINGS, CONNECTIONS, CORPORATIONS, CURB STOPS AND SERVICE APPURTENANCES SHALL BE SERVICE BRASS AS FOLLOWS: SERVICE BRASS SHALL CONFORM TO AWWA STANDARD C-800 (LATEST REVISION) AND PACK JOINT END CONNECTIONS SHALL CONSIST OF BUNA-N BEVELED GASKET FOR WATERTIGHT SEAL. AN INDEPENDENT, SPLIT-CLAMP LOCKING DEVICE OR STAINLESS STEEL BEVELED GRIPPER SHALL BE INCORPORATED IN THE DESIGN FOR ADDITIONAL RESTRAINT. FORD, MUELLER, OR RED HED SERVICE BRASS IS ACCEPTED WITHOUT SUBSTITUTE.
5. WATER SERVICES CONNECTED TO CAST/DUCTILE IRON WATER MAIN PIPE, WATER SERVICE TRACER WIRE IS TO BE CONNECTED TO THE CORPORATION STOP WITH BRASS THAW WIRE NUT COMPRESSION ASSEMBLY WITH SET SCREW.
6. FOR CURB BOXES IN LAWN AREAS, EXTEND WATER SERVICE TRACER WIRE UP OUTSIDE OF CURB BOX WINDING END 3 TIMES AROUND AND APPROXIMATELY 1 INCH BELOW TOP OF CURB BOX. FOR CURB BOXES IN PAVED/CONCRETE AREAS, EXTEND WATER SERVICE TRACER WIRE UP INSIDE OF CURB BOX LEAVING A MINIMUM OF 1 FOOT OF TRACER WIRE COILED UP INSIDE TOP OF CURB BOX.
7. ALL SERVICE CONNECTIONS SHALL HAVE A MINIMUM SIZE OF THREE-FOURTHS (3/4) INCH IN DIAMETER. ALL OPEN CUT INSTALLATION SERVICE PIPES SHALL BE HIGH-DENSITY POLYETHYLENE (HDPE) TUBING, BLUE IN COLOR, COPPER TUBE SIZE (CTS), SDR 9. ALL TRENCHLESS INSTALLATION SERVICE PIPES SHALL BE TYPE K COPPER TUBING.

OPEN CUT SERVICE CONNECTION

N.T.S.

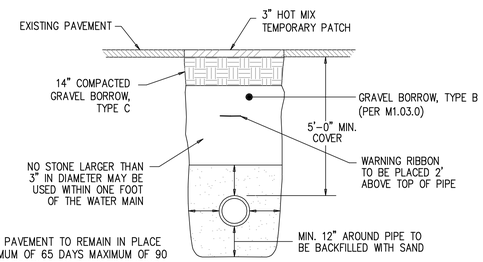

NOTE:

1. TEMPORARY PAVEMENT TO REMAIN IN PLACE FOR A MINIMUM OF 65 DAYS MAXIMUM OF 90 DAYS, TO BE COMPLETELY REMOVED DURING FINAL PAVING.
2. COMPACTION EQUIPMENT AND LIFT THICKNESS SHALL MEET OR EXCEED THE MINIMUM REQUIREMENTS TO OBTAIN THE COMPACTION STANDARDS DESCRIBED IN THE CONSTRUCTION NOTES, UNLESS OTHERWISE APPROVED BY THE CITY ENGINEER. IN PROXIMITY TO STRUCTURES, A JUMPING JACK COMPACTOR SHALL BE REQUIRED.

TYPICAL WATER TRENCH

N.T.S.

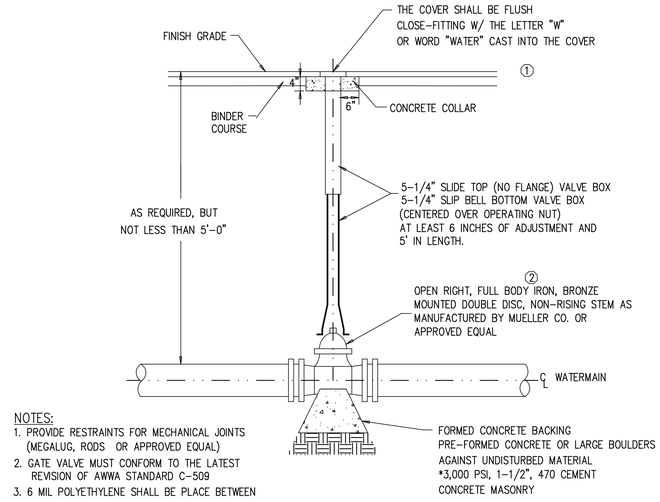

NOTES:

1. PROVIDE RESTRAINTS FOR MECHANICAL JOINTS (MEGALUG, RODS OR APPROVED EQUAL)
2. GATE VALVE MUST CONFORM TO THE LATEST REVISION OF AWWA STANDARD C-509
3. 6 MIL POLYETHYLENE SHALL BE PLACE BETWEEN THE THRUST BLOCK AND PIPE AT ALL MECHANICAL JOINTS PRIOR TO PORING CONCRETE.

TYPICAL GATE VALVE

N.T.S.

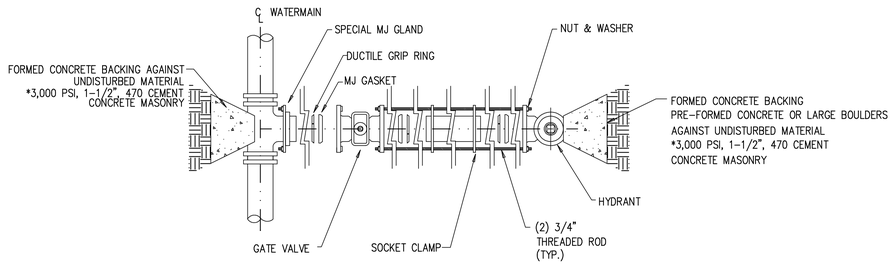

NOTES:

1. PROVIDE RESTRAINTS FOR MECHANICAL JOINTS (MEGALUGS OR FRICTION CLAMPS).
2. 6 MIL POLYETHYLENE SHALL BE PLACE BETWEEN THE THRUST BLOCK AND PIPE AT ALL MECHANICAL JOINTS PRIOR TO PORING CONCRETE.

VALVE CONNECTION

N.T.S.

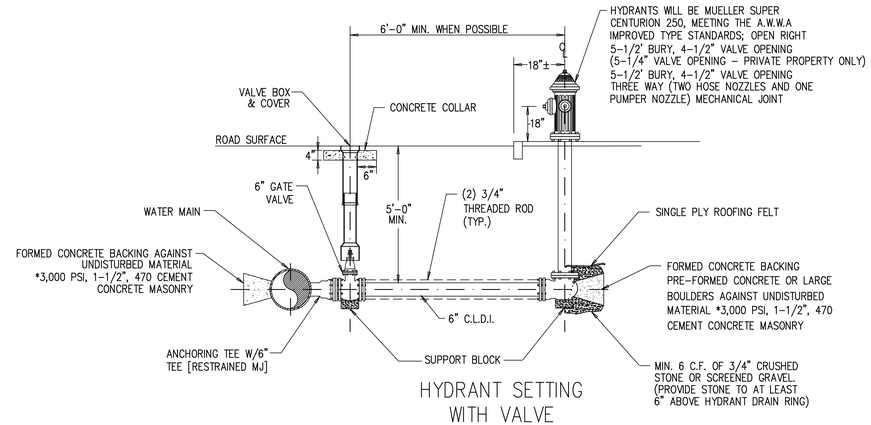

HYDRANT SETTING WITH VALVE

N.T.S.

NOTES:

1. PROVIDE HYDRANT AND VALVE JOINTS WITH MECHANICAL JOINTS (MEGALUG OR APPROVED EQUAL).
2. SUPPORT BLOCKS TO BE PRESSURE TREATED WOOD OR CONCRETE MASONRY BLOCKS.
3. ALL VALVES OPEN RIGHT.
4. 6 MIL POLYETHYLENE SHALL BE PLACE BETWEEN THE THRUST BLOCK AND PIPE AT ALL MECHANICAL JOINTS PRIOR TO PORING CONCRETE.

CITY OF MARLBOROUGH
DEPARTMENT OF PUBLIC WORKS
Engineering Division
135 Neil Street
Marlborough, MA 01752
p. (508) 624-6910
f. (508) 624-7699
www.marlborough-ma.gov

REVISIONS

No.	Date	Description
①	8/14/12	ADDED BINDER COURSE
②	8/14/13	REVISED GATE VALVE NOTE
③	2/18/15	REVISED WATER SERVICE TYPE

Drawn By:	Designed By:	Checked By:	Approved By:
ENG	ENG	ENG	ENG

Project Title:

Sheet Title:

WATER DETAILS

Contract No: N/A	Sheet No.: 2
Date: 4/29/15	
Scale: N.T.S.	