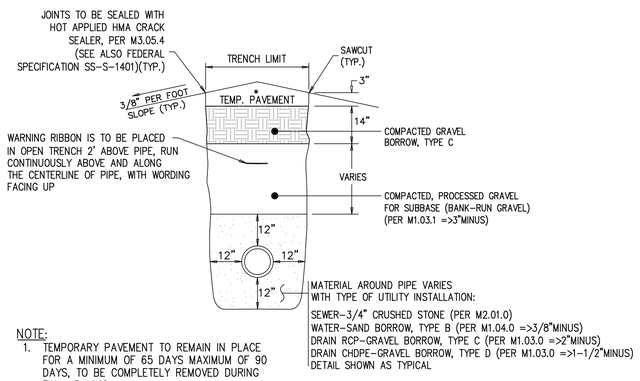

NOTE:
1. TEMPORARY PAVEMENT TO REMAIN IN PLACE FOR A MINIMUM OF 65 DAYS MAXIMUM OF 90 DAYS, TO BE COMPLETELY REMOVED DURING FINAL PAVING.
2. WATER MAIN PIPE IS TO HAVE MINIMUM COVER DEPTH OF 5 FEET FROM FINISHED SURFACE.

TYPICAL EXCAVATION TRENCH

N.T.S.

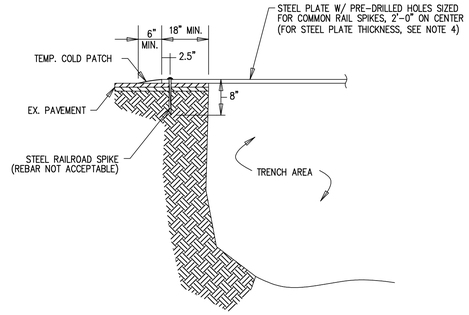

NOTE:
1. THE CITY RESERVES THE RIGHT NOT TO ALLOW THE USE OF STEEL PLATES TO SECURE TRENCHES AT ANY TIME THROUGHOUT CONSTRUCTION.
2. PLACE 48"X48" ORANGE AND BLACK CONSTRUCTION SIGN, STATING "STEEL PLATES 100 FT." TO PROVIDE DRIVERS WITH ADVANCED NOTICE. SEE TRAFFIC MANAGEMENT PLAN FOR PLACEMENT OF SIGNAGE.
3. NOT MORE THAN ONE (1) STEEL PLATE SHALL BE USED AT ANY TIME AND CAN NOT BE USED ON EXCAVATIONS GREATER THAN 7-FEET WIDE.
4. STEEL PLATE DIMENSIONS AND THICKNESS SHALL BE DESIGNED BY THE CONTRACTOR. STEEL PLATE THICKNESS SHALL BE DESIGNED TO ALLOW DEFLECTION OF NOT MORE THAN 0.25".
5. PROVIDE WOOD WEDGES UNDER PLATE EDGES AT UNEVEN SURFACES TO MINIMIZE MOVEMENT.

STEEL PLATE DETAIL

N.T.S.

CONSTRUCTION NOTES

THE FOLLOWING DESCRIBES MATERIALS AND METHODS AS THEY PERTAIN TO ROAD OPENING WORK. ALL WORK SHALL CONFORM TO THE 1988 STANDARD SPECIFICATIONS FOR HIGHWAYS AND BRIDGES, AND ALL SUBSEQUENT SUPPLEMENTAL SPECIFICATIONS THERETO.

BACKFILL MATERIALS

EXCAVATIONS IN THE STREET PAVEMENT AREAS SHALL BE CAREFULLY BACKFILLED WITH LAYERS OF SUITABLE GRAVEL. THE TWELVE (12) INCHES OF BEDDING MATERIAL AROUND PIPES SHALL BE SAND (M1.04.0) FOR WATER, ¾" CRUSHED STONE (M2.01.0) FOR SEWER, GRAVEL BORROW – TYPE C (M1.03.0) FOR RCP DRAIN & TYPE D (M1.03.0) FOR CHDPE DRAIN OR AS SPECIFIED BY THE OWNER OF THE UTILITY AND APPROVED BY THE CITY OF MARLBOROUGH. BACKFILL MATERIAL SHALL CONSIST OF CONTROLLED DENSITY FILL (CDF) – TYPE 1E OR 2E (M4.08.0) FOR ALL MAJOR ROADWAYS OF THE CITY OR AS DIRECTED BY THE COMMISSIONER OF PUBLIC WORKS.

SUITABLE GRAVEL MATERIAL FOR BACKFILLING SHALL BE GRANULAR FILL CONSISTING OF SOIL SUBSTANTIALLY FREE FROM CLAY, ORGANIC MATERIALS, LOAM, WOOD, TRASH OR OTHER OBJECTIONABLE MATERIAL WHICH MAY NOT BE COMPRESSIBLE OR WHICH CANNOT BE PROPERTY COMPACTED. IT SHALL NOT CONTAIN STONES, BROKEN CONCRETE, MASONRY RUBBLE OR OTHER SIMILAR MATERIALS. IT SHALL HAVE PHYSICAL PROPERTIES SUCH THAT IT CAN BE READILY SPREAD AND COMPACTED. IT SHALL NOT CONTAIN ANY SNOW, ICE OR FROZEN SOIL.

COMPACTION OF BACKFILL

BACKFILL SHALL BE UNIFORMLY DISTRIBUTED IN SUCCESSIVE LAYERS, EACH LAYER BEING THOROUGHLY COMPACTED BEFORE THE SUCCEEDING LAYER IS PLACED. THE ENTIRE WIDTH OF THE TRENCH SHALL BACKFILLED AND MECHANICALLY TAMPED IN LIFT DEPTHS NOT GREATER THAN (12) INCHES. COMPACTION EQUIPMENT AND LIFT THICKNESS SHALL MEET OR EXCEED THE MINIMUM REQUIREMENTS TO OBTAIN THE COMPACTION STANDARDS UNLESS OTHERWISE APPROVED BY THE CITY ENGINEER. THE TOP LAYER OF BACKFILL SHALL BE FOURTEEN (14) INCHES (IN A TEMPORARY TRENCH), AND TWELVE (12) INCHES (IN A PERMANENT TRENCH) OF GRAVEL COMPACTED TO 97% OF MAXIMUM DENSITY.

GRADING ROLLING AND FINISHING

PAVEMENT PLACED SHALL BE PLACED AND RAKED TO A UNIFORM SURFACE, ROLLED TO THE REQUIRED THICKNESS AND TO A GRADE THAT WILL MATCH THE EXISTING BITUMINOUS ROAD SURFACE. THE PERMITTEE SHALL MAINTAIN THE SURFACING AND SHALL PROMPTLY FILL WITH SIMILAR MATERIAL ANY DEPRESSION AND HOLES THAT MAY OCCUR SO AS TO KEEP THE SURFACING IN A SAFE AND SATISFACTORY CONDITION FOR TRAFFIC.

TEMPORARY PAVEMENT

A TEMPORARY PAVEMENT SHALL BE PLACED ON THE SURFACE OF THE FILL AND THOROUGHLY COMPACTED. A TEMPORARY PAVEMENT SHALL BE HOT MIX ASPHALT THREE (3) INCHES THICK (SEE EXCAVATION TRENCH DETAIL). "COLD PATCH" MAY BE ALLOWED IF APPROVED BY THE COMMISSIONER OF PUBLIC WORKS DUE TO ADVERSE WEATHER CONDITIONS. IF PLATES ARE USED THEY SHALL BE RAMPED TO MATCH THE EXISTING PAVEMENT. TEMPORARY PAVING OR STEEL PLATING SHALL IMMEDIATELY FOLLOW THE BACKFILLING OPERATION.

PERMANENT PAVING

THE FINAL BITUMINOUS CONCRETE SURFACE SHALL NOT BE PLACED ANY EARLIER THAN 65 DAYS OR NO LATER THAN 90 DAYS FROM THE DATE OF COMPLETION OF THE TEMPORARY SURFACE WITHOUT APPROVAL FROM THE COMMISSIONER OF PUBLIC WORKS. THE TEMPORARY PAVEMENT AND SUB-BASE SHALL BE EXCAVATED TO THE GRADE REQUIRED BY THE PERMIT PRIOR TO PLACEMENT OF THE FINAL BITUMINOUS CONCRETE SURFACE. THE BINDER COURSE SHALL NOT BE LESS THAN THE EXISTING ROADWAY BINDER COURSE AND SHALL NOT BE LESS THAN THREE AND ONE-HALF (3 ½) INCHES IN DEPTH AND THE TOP COURSE SHALL BE ONE AND ONE-HALF (1 ½) INCHES IN DEPTH. IN SOME INSTANCES, BEYOND A SIMPLE TRENCH EXCAVATION, PAVEMENT DETAILS AND RESURFACING REQUIREMENTS WILL BE INCLUDED AS A SPECIAL CONDITION IN THE PERMIT (E.G. PAVEMENT REQUIREMENTS ON ROUTE 85).

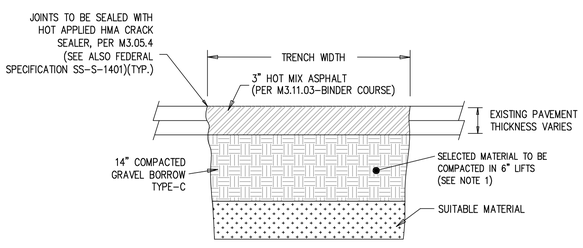

NOTE:
1. COMPACTION EQUIPMENT AND LIFT THICKNESS SHALL MEET OR EXCEED THE MINIMUM REQUIREMENTS TO OBTAIN THE COMPACTION STANDARDS DESCRIBED IN THE CONSTRUCTION NOTES, UNLESS OTHERWISE APPROVED BY THE CITY ENGINEER. IN PROXIMITY TO STRUCTURES, A JUMPING JACK COMPACTOR SHALL BE REQUIRED.

TEMPORARY TRENCH PAVING TYPICAL SECTION

N.T.S

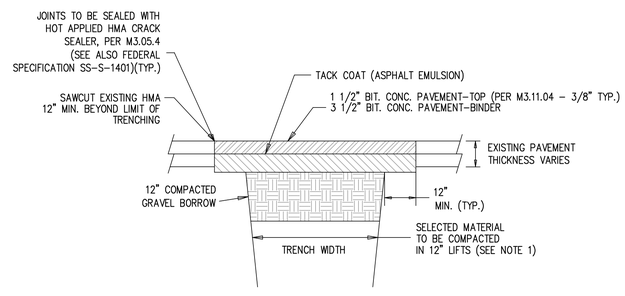

NOTE:
1. COMPACTION EQUIPMENT AND LIFT THICKNESS SHALL MEET OR EXCEED THE MINIMUM REQUIREMENTS TO OBTAIN THE COMPACTION STANDARDS DESCRIBED IN THE CONSTRUCTION NOTES UNLESS OTHERWISE APPROVED BY THE CITY ENGINEER. IN PROXIMITY TO STRUCTURES, A JUMPING JACK COMPACTOR SHALL BE REQUIRED.

TYPICAL FINAL TRENCH PAVING

N.T.S

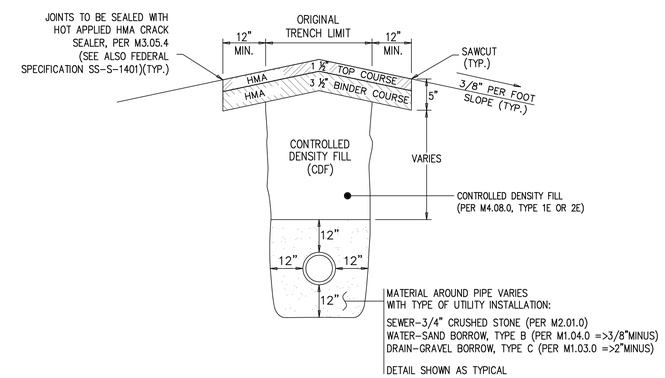

TYPICAL FLOWABLE FILL TRENCH

N.T.S.

CITY OF MARLBOROUGH
DEPARTMENT OF PUBLIC WORKS
Engineering Division
135 Neil Street
Marlborough, MA 01752
p. (508) 624-6910
f. (508) 624-7699
www.marlborough-ma.gov

REVISIONS

No.	Date	Description
1.		

Drawn By:	Designed By:	Checked By:	Approved By:
ENG	ENG	ENG	ENG

Project Title:

Sheet Title:
TRENCH DETAILS

Contract No: N/A	Sheet No.: 1
Date: 8/30/10	
Scale: N.T.S.	