[] City Clerk [] Contractor [] Legal /CPO [] Department [] Auditor

City of Marlborough

DEPARTMENT OF PUBLIC WORKS

135 Neil Street, Marlborough, MA 01752

Contract Documents and

Specifications for the

Reconstruction of Houde Street

and Appurtenant Work

Contract ED 2014-14

Contact Person:
City Engineer
Department of Public Works
Engineering Division
135 Neil Street
Marlborough, Massachusetts 01752
Phone: 508-624-6910 ext. 7200
Fax: 508-624-7699
dpw@marlborough-ma.gov

TABLE OF CONTENTS

	Number of Pages
TITLE SHEET FOR PROJECT	1
TABLE OF CONTENTS	1
NOTICE TO BIDDERS	1
BIDDING DOCUMENTS	
INSTRUCTIONS TO BIDDERS	8
FORM FOR GENERAL BID	10
CONTRACT FORMS	
FORM OF OWNER/CONTRACTOR AGREEMENT	4
FORM OF CORPORATE VOTE	1
FORM OF PERFORMANCE BOND	1
FORM OF PAYMENT BOND	1
FORM OF CONTRACTOR'S STATEMENT OF MANAGEMENT	1
FORM OF CPA'S STATEMENT OF CONTRACTOR'S ACCOUNTING CONTROLS	1
FORM OF CONTRACTOR'S EQUAL EMPLOYMENT CERTIFICATION	1
CONTRACT DOCUMENTS	
GENERAL CONDITIONS OF CONTRACT	37
SPECIAL CONDITIONS OF CONTRACT	2
GENERAL CONTRACTOR'S GUARANTEE FORM	2
SPECIFICATIONS	24
APPENDICES	
Appendix A **EEO Processing Requirements**	3
Appendix B **State Prevailing Wage Rates and Forms**	37
Appendix C **Statutory References**	7

NOTICE TO BIDDERS

The City of Marlborough, the Awarding Authority, invites sealed bids for the Reconstruction of Houde Street and Appurtenant Work in Marlborough, Massachusetts, CONTRACT NO. ED 2014-14. The work involves the following major items associated with Houde Street including the reclamation and resurfacing of roadway, improvements to drainage utilities, water utilities, replacement of curbing and sidewalks. Estimated Project Value = $545,094.00. All bids for this project are subject to M.G.L., Ch. 30, §39M and Ch. 149, §44A-44J. Bidders are invited to a non-mandatory Pre-Bid Conference at the City's Engineering Division on **Thursday, July 10, 2014 at 1:00 P.M.** to discuss the work. Further questions can be discussed by contacting the Engineering Division at (508) 624-6910 Extension 7200.

Sealed bids will be received at the Office of the City Engineer, Department of Public Works, Municipal Garage, 135 Neil Street, Marlborough, Massachusetts 01752 Tel. No. (508) 624-6910, Extension 7200 until **1:00 P.M. on Thursday, July 17, 2014** at which time they will be opened and read aloud. Bids submitted after this time will not be accepted. Envelopes containing bids must be plainly marked on the lower left corner as **CONTRACT ED 2014-14 BID PROPOSAL** with the date and time of the bid opening. Specifications, plans and copies of the contract documents to be used must be obtained or may be examined at the Engineering Division of the Department of Public Works, Municipal Garage, 135 Neil Street, Marlborough, MA as of **Wednesday, July 2, 2014. A non-refundable fee of $30.00 in check or money order payable to the City of Marlborough will be required for each set of the Contract Documents. An additional fee of $5.00 is to be included in the check or money order if the bid package is to be mailed or provide use of the bidder's FedEx, U.P.S. or other prepaid account number. The city encourages specifications, plans and copies of the contract documents be obtained at no charge through the City's website located at www.marlborough-ma.gov (click Public Works then click DPW Procurement).** Each bid must be accompanied by a bid deposit in the form of a bid bond, or cash, or a certified check, or a treasure's or cashier's check, issued by a responsible bank or trust company, payable to the City of Marlborough in the amount of 5% of the contract bid price. A Performance and a Labor and Materials Payment Bond, each in the amount of 100% of the contract price, will be required of the successful bidder within ten (10) days of notification of contract award by the City pursuant to M.G.L. Chapter 149, §29. Insurance certificates indicating coverage for public liability, property damage and workman's compensation, in accordance with the contract requirements must be filed with the City by the successful bidder at the time of contract execution.

Workmen's Compensation and condition of employment as amended and other regulations which are included in the bid and contract documents, or any other state construction law or regulation. The Contract must comply with the most current Schedule of Prevailing Wage Rates established by the Massachusetts Department of Labor and Industries for the contract work, a recent list of which is included in the contract documents as provided for by Chapter 149, §26 through 27D as amended.

Equal opportunity and affirmative action in employment shall apply. In accordance with the provisions of EEO and anti-discrimination requirements included in the contract documents, the successful bidder, must agree to a contract obligation that affirms its willingness to maintain on the project a not less than five percent (5%) ratio of minority employee man hours in each job category.

In accordance with the provisions of applicable statues, laws, rules, regulations, ordinances and the City of Marlborough's Minority and Women's Business Enterprise (MBE/WBE) Program, all qualified contractors will receive consideration without regard to race, age, color, religious creed, gender, handicap, sexual orientation, veteran's status or national origin. The City reserves the right to reject any and all bids or parts thereof, waive any informality and to omit any item or items deemed advisable for the best interests of the public to do so.

CITY OF MARLBOROUGH
DEPT. OF PUBLIC WORKS
BY: City Engineer

INSTRUCTIONS TO BIDDERS

ARTICLE 1 - BIDDER'S REPRESENTATION

1.1 Each General Bidder (hereinafter called the **"Bidder"**) by making a bid (hereinafter called **"bid"**) represents that:

1.1.1 The Bidder has obtained, read and understands the Contract Documents and the bid is made in accordance therewith.

1.1.2. The Bidder has visited the site and is familiar with the local conditions under which the Work has to be performed.

1.1.3. The documents are adequate and that the bidder will produce the required results.

1.2 Failure to so examine the Contract Documents and site will not relieve any Bidder from any obligation under the bid as submitted. The City of Marlborough will not be responsible for errors, omissions, or charges for extra work arising from any failure by the Bidder to familiarize itself with the bid/contract documents and existing conditions.

1.3 Each bid submitted in response to the bid documents is subject to all contract terms and conditions included herein, and any contract awarded will incorporate all of these contract terms.

ARTICLE 2 - CONTRACTOR'S CERTIFICATION

2.1. All employees who work on this construction site must have no less than 10 hours of OSHA-approved safety and health training. **See Chapter 306 of the Acts of 2004 and M.G.L. c. 30, §39S**.

2.2. The Contractor and all subcontractors on this project will be required to provide certification of this compliance with this requirement in accordance with the provisions of these Contract Documents.

ARTICLE 3 - REQUESTS FOR INTERPRETATION

3.1 Bidders shall promptly notify the City Engineer or designee of any ambiguity, inconsistency, or error which they may discover upon examination of the Contract Documents, the site, and local conditions.

3.2 Bidders requiring clarification or interpretation of the Contract Documents shall make a written request to the City Engineer. The City Engineer will answer such requests if received no later than five (5) business days, excluding Saturdays, Sundays, or holidays, before the date for receipt of the bids.

3.3 Interpretation, correction, or change in the Contract Documents will be made by written Addendum which will become part of the Contract Documents. Neither the City of Marlborough nor the City Engineer will be held accountable for any oral interpretations, corrections, or

changes.

3.4 Addenda will be faxed or emailed by the City Engineer or designee, to every individual or firm on record as having received a set of Contract Documents. It shall be the sole responsibility of the individual or firm to ascertain the existence of any and all addenda issued by the City of Marlborough as the Awarding Authority, whether or not the addenda is presented, faxed or emailed to or received by the Bidder.

3.5 Copies of addenda will be made available for inspection at the locations listed in the Advertisement where Contract Documents are on file.

ARTICLE 4 - PREPARATION AND SUBMISSION OF BIDS

4.1 Forms and Bid Preparation

Bids shall be submitted on the **"Form for General Bid"**.

4.1.1 All entries on the bid form shall be made by **typewriter or in ink**.

4.1.2 Sums shall be expressed in **both words and figures** in the space indicated on the bid form. Where there is a discrepancy between the bid sum expressed in words and the bid sum expressed in figures, the words shall control.

4.2 Wage Rates

4.2.1 This Project is subject to the schedule of prevailing wage rates as determined by the Commissioner of the Massachusetts Department of Labor and Workforce Development, Division of Occupational Safety and included elsewhere in the bid documents. (M.G.L. c. 149, §§26-27D inclusive, as amended) .

4.2.2 Refer to the wage rates incorporated herein, as attached Appendix C “State Wage Rates”

4.3 Bid Deposits shall be:

4.3.1 at least five percent (5%) of the greatest possible bid amount, considering all alternates;

4.3.2 made payable to the **City of Marlborough;**

4.3.3 conditioned upon faithful performance by the principal of the agreements contained in the bid, and

4.3.4 in the form of cash, certified check, treasurer’s or cashier’s check issued by a responsible bank or trust company, or a bid bond issued by a surety company licensed to do business in the Commonwealth of Massachusetts and satisfactory to the City of Marlborough as the Awarding Authority.

4.3.5 retained until the execution and delivery of the Owner/Contractor Agreement if they represent the bid deposit of one of the three (3) lowest responsible and eligible Bidders or, if no award is made, then at the

expiration of thirty (30) business days after the opening of the bids, Saturday, Sundays, and legal holidays excluded, unless forfeited by failure to sign the contract as hereinafter provided.

4.3.6 All bid bonds shall be retained by the City of Marlborough unless accompanied by a stamped self-addressed envelope.

4.4 Delivery of Bids

4.4.1 General Bids, including the bid deposit, shall be submitted on a form furnished by the City of Marlborough and enclosed in a **sealed envelope** with the following plainly marked on the outside lower left corner:

General Bid for:
• Name of Project and Contract Number
• Bidder's Name, Business Address, and Phone Number

The City of Marlborough will not be responsible for the premature opening of any sealed bid not properly identified.

4.4.2 Date and time for receipt of bids is set forth in the Advertisement.

4.4.3 Timely delivery of a bid to the location designated shall be the full responsibility of the Bidder. Any bid received after the time and date specified will not be considered.

4.4.4 If, at the time of the scheduled bid opening, the designated location for receipt of bids is closed due to uncontrolled events, such as fire, snow, ice, wind, or building evacuation, the bid opening will be postponed until the time specified in the Advertisement for delivery of bids on the next normal business day. Bids will be accepted until that date and time.

ARTICLE5 – ALTERNATES, if applicable

5.1 Each Bidder shall acknowledge Alternates in Section C on the Form for General Bid by listing the individual Alternate number and entering the dollar amount of addition or subtraction necessitated by the Alternate listed in the corresponding space.

5.2 Bidders shall enter on the Form for General Bid a single amount for each Alternate which shall represent the amount for work performed by the General Contractor.

5.3 In the event an Alternate does not involve a change in the amount of the base bid, the Bidder shall so indicate by listing the individual Alternate number and acknowledge the Alternate by inserting **"No Change", or "No Charge", "N/C" or "0"** in the corresponding space provided for that Alternate.

5.4 The low Bidder will be determined on the basis of the sum of the base bid and the accepted alternates.

ARTICLE 6 - WITHDRAWAL OF BIDS

6.1 Before Opening of Bids

6.1.1 Any bid may be withdrawn prior to the time designated for receipt of bids upon written request and received by:

Office of the City Engineer
Department of Public Works
135 Neil Street
Marlborough, MA 01752

Withdrawal of bids must be confirmed over the Bidder's signature by written notice post-marked or sent by facsimile on or before the date and time set for receipt of bids.

6.1.2 Withdrawn bids may be resubmitted up to the time designated for the receipt of bids.

6.2 After Opening of Bids

6.2.1 Bidders may withdraw a bid, without penalty, any time up to the time of Award as defined in paragraph 8.1, and upon demonstrating, to the satisfaction of the City of Marlborough, that a bona fide clerical error was made during the preparation of the bid. Failure to conclusively demonstrate a bona fide clerical error may result in forfeiture of the bid deposit.

6.2.2 Bidders may not change the price or any other provision in a manner prejudicial to the interest of the City or to fair competition. If a mistake and the intended bid are clearly evident on the face of the bid, the City of Marlborough may correct the mistake to reflect the intended correct bid and so notify the bidder in writing. The bidder may not withdraw a bid if a mistake is clearly evident on the face of the bid, but the intended correct bid is not similarly evident.

6.3 In the event of a General Bid Withdrawal after Opening of Bids, the City of Marlborough shall consider the bid from next lowest eligible and responsible bidder.

ARTICLE 7 - CONTRACT AWARD

7.1 **Award** means both the determination and selection of the lowest, responsible and eligible bidder by the City of Marlborough as the Awarding Authority.

7.2 The City of Marlborough will award the contract to the lowest responsible and eligible bidder within sixty (60) calendar days after the opening of bids, unless such time is mutually extended by the City and the apparent low bidder.

7.3 The Contract will be awarded to the lowest responsible and eligible Bidder, judged on the basis of information about the bidder's experience, performance on recent and current projects and appropriate references. The award of contract will be subject to execution of the contract by the Contractor within ten (10) calendar days of the date of notification of the contract award and submission of the bonds required herein from a surety company qualified to do business

under the laws of the Commonwealth and in a form acceptable to the City, and all other documentation required by the contract documents.

7.4 The award of this Contract is subject to the approval of the Mayor and is subject to appropriation. Contracts without Mayor approval shall not be considered valid.

7.5 The City of Marlborough reserves the right to waive any informality in or to reject any or all Bids if it be in the public interest to do so.

7.6 The City of Marlborough also reserves the right to reject any bid if it determines that such bid does not represent the bid of a person competent to perform the work as specified, or if bid prices are not reasonable for acceptance without further competition.

7.7 As used herein, the term "lowest responsible and eligible bidder" shall mean the General Bidder whose bid is the lowest of those Bidders demonstrably possessing the skill, ability, the required manpower and equipment, and integrity necessary for the faithful performance of the work called for in the bid documents, and who meets the requirements for Bidders set forth in M.G.L. c.30 §39M(c) and is not debarred from bidding under M.G.L. c.29 §29F; and who shall certify that they are able to furnish labor that can work in harmony with all other elements of labor employed or to be employed on the work.

7.8 The City of Marlborough intends to award one contract to the lowest responsible and eligible bidder. No award will be made to any contractor who can not satisfy the City that he/she has sufficient ability and experience in the work to be performed and sufficient capital to enable the Contractor to prosecute and complete the Work successfully within the time specified. The decision or judgment of the City's representative, on behalf of the City of Marlborough as the Awarding Authority, on these matters shall be final, conclusive and binding.

7.9 Evidence of prior experience must be submitted to the City of Marlborough prior to the award of a contract with the successful bidder. The General Contractor that performs the substantive portion of the principal work described in the Specifications must have a documented record of at least five (5) years of reliable performance in similar work, and must submit references to substantiate it is a "responsible and eligible bidder" as defined in **M.G.L. c. 30, §39M** by providing a complete list of all Massachusetts communities for which the company has provided similar services, including contract amounts, names and telephone numbers of contact officials. If bidders experience is less than five (5) years, the bidder shall provide similar information for private sector companies for which the bidder has performed for similar projects.

7.10 The General Bidder must have successfully completed at least one (1) contract for a project similar in scope, size, and complexity to the Work specified herein and must identify a reference for same.

ARTICLE 8 - FORMS REQUIRED FOR CONTRACT APPROVAL

8.1 Upon Award, the Bidder shall complete the following forms to ensure prompt contract validation. These forms will be provided to the selected Bidder by the City of Marlborough through its Engineering Division. Submit (5) originals of the contract documents per City policy.

8.2 Owner/Contractor Agreement and Form of Corporate Vote.

8.3 Form of Contractor's Equal Employment Certification in accordance with the provisions of the General Conditions.

8.4 Form of Performance Bond and Form of Payment (Labor & Materials) Bond must be submitted in the amount of one hundred percent (100%) of the total contract amount by the General Contractor on the City of Marlborough's form or similar, in accordance with provisions of the General Conditions. **The dates on the bonds must coincide with the contract date, contain the signature of both the Contractor and the Surety, and a current original Power-of-Attorney must be attached to each bond.**

8.4.1 Both the General Bidder and Surety must sign bond with Surety's impressed seal or otherwise be an original. Any such bond must be issued by a surety company licensed by the Commonwealth's Division of Insurance and listed in the most recent United States Treasury Department Circular 570 – Surety Companies Acceptable on Federal Bonds.

8.4.2 Bond must be made out to the City of Marlborough.

8.4.3 Certification of full force and effective must be dated.

8.5 Insurance and Indemnification

8.5.1 Certificates for the General Contractor are required at the time of contract execution and must be submitted in accordance with provisions of the General Conditions. The City of Marlborough must be included as a named additional insured on all liability policies except where prohibited by law.

8.5.2 General Contractors must indicate on special perils insurance or installation floater if stored materials are covered.

8.5.3 The General Contractor shall indemnify from harm to any of its employees, the City's employees or agents of the City and/or their employees or members of the public by providing evidence of personal and vehicular liability, and property damage insurance coverage in the amount specified in Section 28 of the General Conditions.

8.6 Statement of Management on Internal Accounting Controls and a Statement prepared by a CPA expressing an opinion to the state of Management Controls, as required by M.G.L. c.30 §39R. **This applies to all General Contractors with contracts of $100,000 or more.** Samples are provided in the Contract Document section of the bid documents.

8.7 At time of contract execution, the General Contractor must submit a completed Certificate of Tax Compliance pursuant to M.G.L. Ch. 62, §49A and of Unemployment Payments pursuant to Ch. 151A, §19A.

ARTICLE 9 - CONTRACT VALIDATION

9.1 The Owner-Contractor Agreement shall not be valid until signed by the the Mayor and whose signature has been Attested to by the City Clerk, the Department Head, the Auditor, the Chief Procurement Officer and is Approved as

to Form by the City Solicitor or the Assistant City Solicitor.

9.2 The Notice to Proceed for construction shall not be issued until the Owner/Contractor Agreement has been validated by the signature of the Mayor.

9.3 Incomplete or unacceptable submissions of forms required by paragraphs 9.2 - 9.8 will delay the validation of the Owner/Contractor Agreement by the Mayor.

ARTICLE 10 – APPLICABLE BID & OTHER LAWS

10.1 The bidding for and award of the contract for this project are subject to and in accordance with the provisions of either or both M.G.L. Ch.30, §39M as amended and M.G.L. Ch. 149, §44A – 44J inclusive.

10.2 The City of Marlborough is subject to the rules and regulations of the Architectural Access Board (521 CMR 1.00 et seq.), if applicable to the project.

10.3 Wherever in the Bid Documents, General Conditions, Contract, Plans or Specifications reference is made to the Massachusetts General Laws it shall be construed to include all amendments thereto effective as of the date of issue of the invitation to bid on the proposed work.

ARTICLE 11 – PERMITS, LICENSES AND FEES

11.1 The City of Marlborough will waive any fees for permits or licenses due to the City of Marlborough.

11.2 The General Contractor is responsible for securing permits and arranging inspections as required pursuant to applicable laws, rules, regulations and ordinances.

ARTICLE 12 – MISCELLANEOUS

12.1 The work will be substantially completed no later than **sixty (60) calendar days** following receipt by the Contractor of a written Notice to Proceed issued by the City. Liquidated Damages, but not as a penalty, will be assessed at a rate of $500.00 per calendar day beyond the date indicated.

12.2 No payments will be made for any extra charges such as shipping or delivery.

12.3 The City is exempt from Massachusetts Sales Tax and no bid shall include same. The Contractor may contact the City Auditor at 508-460-3774 for information on what forms are needed to purchase supplies without payment of taxes.

12.4 The specifications within require the performance of all things necessary, proper for or incidental to the provision of services or supplies specified herein. Any services mentioned in these specifications and all things not specified herein, but involved in carrying out their intent and the complete and proper execution of the services are required by these specifications; the Contractor shall perform same as though they were specifically described and mentioned.

12.5 The successful Contractor will not be permitted to assign or underlet the contract, or assign either legally or equitably, any monies hereunder, or its claim thereto, without the previous written consent from the City as provided in the attached contract.

END OF SECTION

CITY OF MARLBOROUGH
MARLBOROUGH, MASSACHUSETTS 01752-3812

FORM FOR GENERAL BID

To the Awarding Authority:

A. The undersigned proposes to furnish all labor and materials required for the **Reconstruction of Houde Street and Appurtenant Work, Contract ED 2014-14** in Marlborough, Massachusetts, in accordance with the accompanying plans and Specifications prepared by **City Engineer, Department of Public Works- Engineering Division, 135 Neil Street, Marlborough, MA 01752** for the contract price specified below, subject to additions and deductions according to the terms of the specifications.

B. This bid includes addenda numbered _____.

C. The proposed contract price is:

_____ dollars $_____.
(total bid in words) **(figures)**

The Total Bid Price includes Items 120.1 through 999.9 (based bid only).

For Alternate **No.** _____ **Add** $_____; **Subtract** $_____

(Each Alternate shall be listed separately. Repeat preceding line for each alternate.)

D. The undersigned agrees that, if selected as general contractor, we will within ten (10) days, Saturdays, Sundays and legal holidays excluded, after written notification thereof by the Awarding Authority of a contract award and presentation thereof for signature, execute a contract in accordance with the terms of this bid and furnish a performance bond and also a labor and materials or payment bond, each of a surety company qualified to do business under the laws of the Commonwealth and satisfactory to the awarding authority and each in the sum of one hundred percent (100%) of the contract price, the premiums for which are to be paid by the contractor and are included in the contract price; provided, however, that if there is more than one (1) surety company, the surety companies shall be jointly and severally liable *(effective August 8, 2008)*. Should the undersigned fail to fulfill any of the stipulations as hereinbefore set forth, the City shall have the right to retain as liquidated damages the amount of the bid security, which shall become the City's property. If the bid bond was furnished as bid security, it is agreed that the amount thereof shall be paid as liquidated damages to the City by the Surety.

The undersigned hereby certifies, in accordance with M.G.L. c. 30, §39M(c), as amended, and any other State and Federal Labor standards and regulations, that he is able to furnish labor that can work in harmony with all other elements of labor employed or to be employed on the work; that all employees to be employed at the worksite will have successfully completed a course in construction safety and health approved by the United States Occupational Safety and Health Administration (OSHA) that is at least ten (10) hours in duration at the time the employee begins work and who shall furnish documentation of successful completion of said course with the first certified payroll report for each employee *(effective July 1, 2006)*; and that he will comply fully with all laws and regulations applicable to awards made subject to section forty-four A (44A) of Chapter 149.

The undersigned hereby agrees that they will not withdraw their bid within sixty (60) consecutive calendar days after the actual date of the opening of the Bids.

F. The undersigned further certifies under the penalty of perjury that this bid is in all respects bona fide, fair and made without collusion or fraud with any other person. As used in this paragraph, the word "person" shall mean any natural person, joint venture, partnership, corporation or other business or legal entity. The undersigned further certifies under penalty of perjury that the said undersigned is not presently debarred from doing public construction work in the commonwealth including:

- ☐ individuals and firms suspended or debarred by the Division of Capital Asset Management pursuant to M.G.L. c.29, § 29F and M.G.L. c.149, § 44C
- ☐ and does not include individuals or firms suspended or debarred by the Massachusetts Department of Transportation or any other agency of the Commonwealth of Massachusetts with authority to suspend or debar under M.G.L. c.29, § 29F or M.G.L. c.30, § 39R
- ☐ This list also does not include individuals or firms suspended or debarred by the Massachusetts Office of Attorney General pursuant to M.G.L. c.149, § 27C and M.G.L. c.149, § 148B
- ☐ the Massachusetts Division of Industrial Accidents pursuant to M.G.L. c.152, § 25C
- ☐ The United States Government on the list of contractors suspended or debarred by federal agencies net at http://epls.arnet.gov.

or any other applicable debarment provisions of any other chapter of the General Laws or any rule or regulation promulgated thereunder.

G. The undersigned offers the following information as evidence of the contractor's qualifications to perform the work as bid upon according to all the requirements of the plans and specifications:

1. Have been in business under present business name for _____ years.

2. Ever failed to complete any work awarded? _____ If yes, please explain on separate sheet.

3. List all open recent contracts (public and private) with the names of awarding authority/owner on which you served as contractor or subcontractor for work of similar character as required for the above-named project. Attach supplemental sheet to provide a complete list.

Project Description Awarding Authority	**Architect/Engineer or Other Contact Name & Number**	**Contract Amount**
_____	_____	$ _____
_____	_____	$ _____
_____	_____	$ _____
_____	_____	$ _____
_____	_____	$ _____

4. **Bank Reference**: _____

Date _____

_____
(Company Name of General Bidder)

By _____
(Signature of Bidder)

_____
Print Name & Title of Person Signing Bid)

_____
(Business Address)

_____
(City, State and Zip Code)

_____
(Telephone Number)

_____
(Fax Number)

_____
Email

INSERT BID TABS FROM EXCEL SPREADSHEET

BIDDERS INFORMATION SHEET

The following information is furnished by the bidder for the information of the City of Marlborough as the Awarding Authority.

1. Furnish the following information regarding the Bidder:

A. If an Individual or Proprietorship:

Name _____ Residence _____

If doing business under a firm name:

Name of firm _____

Business Address _____

Name of Individual _____ Residence _____

B. If a partnership: (Name of all partners)

Name of partner _____ Residence _____

Name of partner _____ Residence _____

C. Corporation:

Full Legal Name: _____

Incorporated in what State _____

Principal Place of Business _____

Place of Business in Massachusetts _____

President _____ Treasurer _____

Secretary _____

D. **If a foreign corporation**, are you registered to do business in Massachusetts?

Yes [ ] NO [ ]

If selected for this work you are required under M.G.L. c30 §39L to obtain from the Secretary of State, Foreign Corporation Section, State House, Boston, MA, a certificate stating that your corporation is registered; and furnish said certificate to the City of Marlborough as the Awarding Authority prior to execution of a contract.

2. Furnish the following information regarding the Surety Company to be used by Bidder:

Full Legal Name _____

State of Incorporation _____

Principal Place of Business _____
Licensed to do Business in Massachusetts: Yes [ ] No [ ]

Name & Contact Number of local agent:

_____

STATEMENT OF BIDDER'S QUALIFICATIONS
(to be completed for contracts not requiring MassDOT pre-qualification)

(All questions must be answered and the data given must be clear and comprehensive. This statement must be notarized. If necessary, add separate sheets for further details.)

1. Name of Bidder _____

2. Permanent Main Office Address _____

   Street and No. _____

   Owners or Town_____

   State and Zip Code _____

3. When Organized: _____

4. When Incorporated: _____

5. How many years have you been engaged in the contracting business under your present firm name? _____

6. General character of work performed by your company:

   _____

7. Have you ever failed to compete any work awarded to you: Yes [ ] No [ ]
   If so, where and why:

   _____

8. Have you ever defaulted on a contract? Yes [ ] No [ ]

9. Have the principal Owners of your company ever failed to complete a contract or been defaulted while engaged in a similar type of business under a different name or different business entity?

   If so, attach a separate statement describing the situation in full.

10. Will you, if requested, furnish a detailed financial statement and any other such information to the Awarding Authority?
    Yes [ ] No [ ]

11. List the more important work completed by your company within the past ten years, stating the approximate cost for each and the month and year completed.

_____

_____

_____

_____

12. List your major equipment available for this contract:

_____

_____

_____

_____

13. List your experience in construction work similar in scope and importance to this project:

_____

_____

_____

_____

14. List your contracts on hand, showing gross amount of each contract and the approximate anticipated date of completion.

_____

_____

_____

_____

15. The undersigned hereby authorizes any person, firm or corporation to furnish any information requested by the Awarding Authority in verification of the statements contained in this Statement of Bidder's Experience.

Dated this _____ day of _____, 20____.

_____
(Name of Bidder)

By: _____
(Signature)

_____
(Title)

SEAL _____
(Notary Public)

_____
(My Commission Expires)

FORM FOR GENERAL BID

BID BOND

KNOW ALL MEN BY THESE PRESENTS, that we the undersigned

_____, as Principals, and
(insert name of bidder)

_____, As Surety, are hereby
(insert name of surety)

held and firmly bound unto the City of Marlborough, MA in the sum of $_____as liquidated damages for payment of which, well and truly to be made, we hereby jointly and severally bid ourselves, our heirs, executors, administrators, successors and assigns.

The condition of this obligation is such that whereas the Principal has submitted to the City of Marlborough, MA a certain Bid attached hereto and hereby made a part hereof, to enter into a contract in writing hereinafter referred to as the ”AGREEMENT” and/or “Contract*,”* for the **Reconstruction of Houde Street and Appurtenant Work - Contract ED 2014-14.**

NOW THEREFORE,

(a) If said bid shall be rejected or withdrawn as provided in the INFORMATION FOR BIDDERS attached hereto or, in the alternative,

(b) If said bid shall be accepted and the Principal shall duly execute and deliver the form of AGREEMENT attached hereto and shall furnish the specified bonds for the faithful performance of the AGREEMENT and/or Contract and for the payments for labor and materials, furnished for the performance of the AGREEMENT and/or Contract,

then this obligating shall be void, otherwise it shall remain in full force and effect; it being expressly understood and agreed that he liability of the Surety for any and all claims hereunder in no event shall exceed the amount of this obligations.

The Surety, for value received, hereby agrees that the obligations of said Surety and its bond shall be in no way impaired or affected by any extensions of the time within which said bid may be accepted, and said Surety does hereby waive notice of any such extensions.

IN WITNESS WHEREOF, the parties hereto have duly executed this bond on the _____ day of _____, 20___

_____
(Name of Principal)

(SEAL)

By: _____

_____
(Name of Surety)

(SEAL)

By: _____

Sealed and delivered in the presence of

_____

CITY OF MARLBOROUGH
MARLBOROUGH, MASSACHUSETTS 01752-3812

REQUIRED CERTIFICATIONS

CERTIFICATE OF COMPLIANCE WITH STATE TAX LAWS AND WITH UNEMPLOYMENT COMPENSATION CONTRIBUTION REQUIREMENTS

Pursuant to M.G.L. Chapter 62C, §49A and M.G.L. Chapter 151A, §19A, I,

_____

authorized signatory for _____

whose principal place of business is at:

_____

do hereby certify under penalties of perjury that the above business organization has filed all state tax returns, paid all taxes as required by law is in compliance with all laws of the Commonwealth relating to taxes, reporting of employees and contractors, and withholdings and remitting child support and has complied with all state laws pertaining to contributions to the unemployment compensation fund and to payments in lieu of contributions.

The Business Organization Social Security Number or Federal Identification Number is:

_____

Signed under the penalties of perjury the _____ day of 2014.

Signature: _____

Name and Title: _____

FORM FOR GENERAL BID
CITY OF MARLBOROUGH, MASSACHUSETTS
RECONSTRUCTION OF
HOUDE STREET
AND APPURTENANT WORK
CONTRACT ED 2014-14

(HOUDE STREET)

Item No.	Quantity	Item with Unit Bid Price Written in Words	Unit Price Dollars	Unit Price Cents	Amount Dollars	Amount Cents
120.1	300.	UNCLASSIFIED EXCAVATON _____ DOLLARS AND _____ CENTS PER CUBIC YARD				
151.01	575.	GRAVEL BORROW TYPE C _____ DOLLARS AND _____ CENTS PER CUBIC YARD				
151.22	140.	GRAVEL BORROW FOR SIDEWALKS _____ DOLLARS AND _____ CENTS PER CUBIC YARD				
170.	10400.	FINE GRADING AND COMPACTING - SUBGRADE AREAS _____ DOLLARS AND _____ CENTS PER SQUARE YARD				
201.5	4.	CATCH BASIN (MUNICIPAL STANDARD) _____ DOLLARS AND _____ CENTS EACH				
202.01	1.	MANHOLE (MUNICIPAL STANDARD) _____ DOLLARS AND _____ CENTS EACH				
220.2	5.	DRAINAGE STRUCTURE REBUILT _____ DOLLARS AND _____ CENTS PER FOOT				
220.5	21.	DRAINAGE STRUCTURE REMODELED _____ DOLLARS AND _____ CENTS EACH				

SUBTOTAL PAGE 1 _____

Item No.	Quantity	Item with Unit Bid Price Written in Words	Unit Price Dollars	Unit Price Cents	Amount Dollars	Amount Cents
220.8	7.	SANITARY STRUCTURE REMODELED _____ DOLLARS AND _____ CENTS EACH				
223.	11.	FRAME AND GRATE OR COVER REMOVED AND RESET _____ DOLLARS AND _____ CENTS EACH				
223.1	20.	FRAME AND GRATE OR COVER REMOVED AND STACKED _____ DOLLARS AND _____ CENTS EACH				
222.	17.	FRAME AND GRATE OR COVER (MUNICIPAL STANDARD) _____ DOLLARS AND _____ CENTS EACH				
224.12	11.	12 INCH HOOD _____ DOLLARS AND _____ CENTS EACH				
224.18	7.	18 INCH HOOD _____ DOLLARS AND _____ CENTS EACH				
241.12	760.	12 INCH REINFORCED CONC. PIPE _____ DOLLARS AND _____ CENTS PER FOOT				
241.18	1090.	18 INCH REINFORCED CONC. PIPE _____ DOLLARS AND _____ CENTS PER FOOT				
347.075	550.	3/4 IN. COPPER TUBING-TYPE K _____ DOLLARS AND _____ CENTS PER FOOT				

SUBTOTAL PAGE 2 _____

Item No.	Quantity	Item with Unit Bid Price Written in Words	Unit Price Dollars	Unit Price Cents	Amount Dollars	Amount Cents
358.	7.	GATE BOX ADJUSTED _____ DOLLARS AND _____ CENTS EACH				
403.	7300.	RECLAIMED BASE COURSE _____ DOLLARS AND _____ CENTS PER SQUARE YARD				
440.	10800.	CALCIUM CHLORIDE FOR ROADWAY DUST CONTROL _____ DOLLARS AND _____ CENTS PER POUND				
460.	1865.	HMA (BINDER & TOP) _____ DOLLARS AND _____ CENTS PER TON				
464.	365.	BITUMEN FOR TACK COAT _____ DOLLARS AND _____ CENTS PER GALLON				
472.1	420.	HMA (VARIOUS) (DRIVEWAY,SIDEWALK,TEMP) _____ DOLLARS AND _____ CENTS PER TON				
482.2	530.	HOT APPLIED ASPHALT CRACK FILLER _____ DOLLARS AND _____ CENTS PER FOOT				
482.3	530.	SAWING ASPHALT PAVEMENT _____ DOLLARS AND _____ CENTS PER FOOT				
570.3	3250.	HMA CURB - TYPE 3 _____ DOLLARS AND _____ CENTS PER FOOT				

SUBTOTAL PAGE 3

Item No.	Quantity	Item with Unit Bid Price Written in Words	Unit Price Dollars	Unit Price Cents	Amount Dollars	Amount Cents
748.1	1.	MOBILIZATION (3% MAX OF CONTRACT VALUE) _____ DOLLARS AND _____ CENTS LUMP SUM				
751.	160.	LOAM BORROW _____ DOLLARS AND _____ CENTS PER CUBIC YARD				
765.	1975.	SEEDING _____ DOLLARS AND _____ CENTS PER SQUARE YARD				
851.	1.	SAFETY CONTROLS FOR CONSTRUCTION OPERATIONS _____ DOLLARS AND_____ CENTS LUMP SUM				
852.	160.	SAFETY SIGNING FOR CONSTRUCTION OPERATIONS _____ DOLLARS AND _____ CENTS PER SQUARE FOOT				
865.2	50.	CROSSWALKS AND STOP LINES REFL. WHITE (EPOXY) _____ DOLLARS AND _____ CENTS PER SQUARE FOOT				
999.1	1.	POLICE SERVICES TEN THOUSAND DOLLARS AND ZERO CENTS ALLOWANCE	$10,000	.00	$10,000	.00
999.9	1.	AS-BUILT DRAWINGS (PER GENERAL CONDITIONS) THREE THOUSAND DOLLARS AND ZERO CENTS ALLOWANCE	$3,000	.00	$3,000	.00

SUBTOTAL PAGE 4

SUBTOTAL PAGE 1	
SUBTOTAL PAGE 2	
SUBTOTAL PAGE 3	
SUBTOTAL PAGE 4	

TOTAL HOUDE STREET BASE BID	

CITY OF MARLBOROUGH
MARLBOROUGH, MASSACHUSETTS
01752-3812

PUBLIC WORKS CONSTRUCTION
CHAPTER 30, SECTION 39M

AGREEMENT
AND
CONTRACT DOCUMENTS

BETWEEN the Owner: **City of Marlborough**
140 Main Street
Marlborough, MA 01752-3812

and the Contractor:

The Project is: **Reconstruction of Houde Street and Appurtenant Work – Contract ED 2014-14**

The Designer is: **Engineering Division**
135 Neil Street
Marlborough, MA 01752

[] City Clerk [] Contractor [] Legal /CPO [] Department [] Auditor

CITY OF MARLBOROUGH

OWNER-CONTRACTOR AGREEMENT

This agreement made on this ___ day of _____, 2014 by and between the City of Marlborough as the awarding authority, a municipal corporation within said County of Middlesex and having a usual place of business at 140 Main Street, Marlborough, MA 01752, (hereinafter called the "City"), as represented by the MAYOR acting for and in behalf of the City of Marlborough who signs these presents in his official capacity, and incurs no liability in his individual capacity and _____, a corporation, partnership, individual organized under the laws of _____ and having a usual place of business at _____ (hereinafter called the "Contractor").

W I T N E S S E T H, that the City and the Contractor, for the Consideration hereinunder named, agree as follows:

ARTICLE 1. SCOPE OF WORK: The Contractor shall, pursuant to this Agreement, perform all Work required by the Contract Documents for the Reconstruction of Houde Street and Appurtenant Work, Contract ED 2014-14 (hereinafter called the "Project") in the City of Marlborough, Massachusetts, and to accomplish any and all work incidental thereto in accordance with the plans and specifications prepared by the Department of Public Works - Engineering Division dated June 24, 2014 and addenda numbers ____ to____ attached hereto as prepared by the City.

ARTICLE 2. TIME FOR COMPLETION/LIQUIDATED DAMAGES:

2.1 Time is of the essence for this Agreement. The Contractor shall commence work under this Contract on the date specified in the written "Notice to Proceed" and shall bring the Work to Substantial Completion within **sixty (60) calendar days** of said date.

2.2 Liquidated damages, but not as penalty, will be assessed at a rate of Five Hundred Dollars ($500.00) per calendar day beyond the date indicated in the event of a breach of contract.

ARTICLE 3. CONTRACT SUM: The City shall pay the Contractor for the performance of the Work, subject to additions and deductions by Change Order, of the Contract Sum of:

_____ Dollars ($_____)
CONTRACT SUM IN WORDS

Unit prices are referenced in the Form for General Bid, Section C per the Schedule of Unit Pricing Estimate Form(s), which are incorporated and attached hereto**.**

ARTICLE 4. The following Alternates have been accepted and their costs are included in the Contract Sum stated in Article 3 of this Agreement: Alternate(s) _____ and _____.

ARTICLE 5. NOTICE:

5.1 Wherever in this Agreement the Contractor is to give or receive a notice, **(_____)** shall be the Contractor's agent for such purpose.
name to be inserted

5.2 Wherever in the Contract Documents the City is to give or receive a notice, **City Engineer, Department of Public Works, 135 Neil Street, Marlborough, MA 01752** shall be the City's agent for such purpose.

ARTICLE 6. CONTRACTING OFFICERS (MGL c. 43, §29 & c. 44, §31C): Wherever used in this Agreement, the term "Contracting Officers" shall mean the City Officials so designated below, or the individual duly appointed by him/her for the performance of any of his/her functions or responsibilities under this Contract. The work performed hereunder shall be carried out under the direction and subject to the approval and acceptance of the Mayor, Department Head and City Auditor (hereinafter called the Contracting Officers).

ARTICLE 7. THE CONTRACT DOCUMENTS:

7.1 The following, together with this Agreement, form the Contract and all are as fully a part of the contract as if attached to this Agreement or repeated herein (hereinafter collectively referred to as "the Contract Documents"): Advertisement, Notice to Contractors; Instructions to Bidders, Bidding Documents; Contract Forms; General Conditions of the Contract; Specifications, Drawings, Addenda; Special Conditions, if any; Supplementary Conditions, if any, and Appendices as enumerated in the Table of Contents, the drawings as enumerated in the List of Contract Drawings, and all Modifications issued after execution of the Contract. Terms used in this Agreement which are defined in the General Conditions of Contract shall have the meanings designated in those Conditions.

7.2 The Contract Documents are to be read collectively and complementary to one another; any requirement under one shall be as binding as if required by all. In the event of any conflict or inconsistency between the provisions of this Agreement and any of the other Contract Documents, the provisions of this Agreement shall prevail. In the event of any conflict or inconsistency between this Agreement, the Contract Documents and any applicable state law, the applicable statutory provisions shall prevail.

ARTICLE 8. CERTIFICATIONS: The Contractor shall certify prior to executing this Agreement, Tax Compliance pursuant to M.G.L. c. 62C, §49A, as amended, and payment of Unemployment Contributions pursuant to M.G.L. c. 151A, §19A, as amended.

Article 9. Worker Documentation Certification: In accordance with MGL c. 149, § 19C, the undersigned further certifies under the penalties of perjury that the Contractor shall not knowingly use undocumented workers in connection with the performance of this Agreement; that pursuant to federal requirements, the Contractor shall verify the immigration status of all workers assigned to such contract without engaging in unlawful discrimination; and that it shall not knowingly or recklessly alter, falsify, or accept altered or falsified documents from any such worker(s). The Contractor understands and agrees that breach of any of these terms during the contract period may be regarded as a material breach, subjecting the Contractor to sanctions, including but not limited to monetary penalties, withholding of payments, contract suspension or termination.

Article 10. Conflict of Interest: The Contractor warrants, that he/she or his/her employees, agents, officers, directors or trustees have not offered or attempted to offer anything of value to any employee of the City in connection with the award of the Contract. The Contractor further warrants, that (1) presently, there is no financial interest and shall not acquire any such interest, direct or indirect, which would conflict in any manner or degree with the performance of services required to be performed under this Agreement or which would violate M.G.L. c.268A, as amended; (2) in the performance of the Contract, no person having any such interest shall be employed by the Contractor or engaged as a subcontractor by the contractor; and (3) no partner or employee of the firm is related by blood or marriage to any Board Member or employee of the Awarding Authority. Violation of this Article shall be material breach of this Agreement, subjecting the Contractor to sanctions, including but not limited to withholding payments or termination without regard to any enforcement activities undertaken or completed by any enforcement agency.

Article 11. Governing Law: This Agreement shall be governed by, construed, and enforced in accordance with the laws of the Commonwealth of Massachusetts.

Article 12. Validation: This Agreement will not be valid until signed by the Mayor.

IN WITNESS WHEREOF, the Contractor and the City have caused this instrument to be executed under seal on the day and year first above written.

FOR THE CONTRACTOR
BY:

_____
By: _____
Title: _____
Date: _____

[This name for the contractor should match the name on the Certificate of Vote form, if corporation.]

ATTEST:

_____
By: _____
Title: _____

APPROVED AS TO FORM BY LEGAL COUNSEL:

_____
By: Donald V. Rider, Jr.
Title: City Solicitor

_____
By: Cynthia Panagore Griffin
Title: Assistant City Solicitor

FOR THE CITY OF MARLBOROUGH
BY:

_____
By: Arthur G. Vigeant
Title: Mayor
Date: _____

ATTEST:

_____
By: Lisa M. Thomas/Steven W. Kerrigan
Title: City Clerk/Asst. City Clerk

DEPARTMENT HEAD:

_____
By: John L. Ghiloni
Title: Commissioner of Public Works

CERTIFICATION PURSUANT TO CHAPTER 44, § 31C AS TO SUFFICIENCY OF FUNDS AND AUTHORIZATION FOR MAYOR TO EXECUTE CONTRACT:

_____
By: Diane Smith
Title: City Auditor
Purchase Req./P.O.#:_____

CERTIFICATION AS TO PROCUREMENT LAW:

_____
By: Beverly J. Sleeper, MCPPO
Title: Chief Procurement Officer
Or Designated Procurement Office

Procurement Law: _____
Contract/File #:_____

CERTIFICATE OF VOTE OF AUTHORIZATION

I,_____ , Clerk of _____hereby certify that, at a

meeting of the Board of Directors of said Corporation duly held on _____ which date is earlier than the contract to which this certificate is incorporated by reference, at which a quorum was present and voting throughout, the following vote was duly passed and is now in full force and effect:

"Voted: That _____ be and hereby is authorized, directed and (Name of Officer authorized to sign for Corporation)
empowered for, in the name of and on behalf of this corporation, to sign, seal with the corporate seal, execute, acknowledge and deliver other obligations of this Corporation; the execution of any such contract, bond or obligation

by such (Name of Officer) _____ to be valid and binding upon this Corporation for all purposes, and that a certificate of the Clerk of this Corporation setting forth this vote shall be delivered to the Awarding Authority; and that this vote shall remain in full force and effect unless and until the same has been altered, amended or revoked by a subsequent vote of such directors and a certificate of such later vote attested by the Clerk of this Corporation is delivered to the Awarding Authority."

I, further certify that (NAME OF OFFICER)_____

is the duly-elected (TITLE) _____ of said corporation.

►**Signed:**_____
CLERK-SECRETARY

Place of Business:_____

Date of Contract:_____

AFFIX CORPORATE SEAL

►**Countersignature:**_____
(Name and Title of Officer)

In the event that the Clerk or Secretary is the same person as the Officer authorized to sign that contract or other instrument for the Corporation, this Certificate must be counter signed by another officer of the Corporation.

PERFORMANCE BOND

KNOW ALL MEN BY THESE PRESENTS:

That we, ……as **Principal**, (hereinafter called Contractor), and …… as **Surety**, (hereinafter called Surety), are held and firmly bound unto the **City of Marlborough**, as **Obligee**, (hereinafter called City), in the sum of ……. dollars ($.....) lawful money of the United States of America, to be paid to the Obligee, for which payments, well and truly to be made, we bind ourselves, our respective heirs, executors, administrators, successors and assigns, jointly and severally, firmly by these presents.

WHEREAS the **Contractor** has by a written agreement with the **City** dated …… entered into a Contract with the City for the project of ……. In Marlborough, Massachusetts which contract is by reference made a part hereof, and is hereinafter referred to as the Contract.

NOW THEREFORE, THE CONDITION OF THIS OBLIGATION is such that if **Contractor** and all Subcontractors under said contract shall pay for all labor performed or furnished and for all materials used or employed in said contract and in any and all duly authorized modifications, alterations, extensions of time, changes or additions to said contract that may hereafter be made, notice to the surety of such modifications, alterations, extensions of time, changes or additions being hereby waived, the foregoing to include any other purpose or items set out in, and to be subject to, provisions of Massachusetts General Laws Chapter 30, §39A, and Chapter 149, §29, as amended, then this obligation shall become null and void; otherwise it shall remain in full force and virtue.

IN THE EVENT, that the contract is abandoned by the **Contractor**, or in the event that the **City**, under the provisions of said contract terminates the employment of the Contractor or the authority of the Contractor to continue work, said **Surety** hereby further agrees that said **Surety** shall, if requested in writing by the Obligee, take such action as is necessary to complete said contract.

IN WITNESS WHEREOF, we hereunto set our hands and seals this …… Day of ……, 20__.

PRINCIPAL _____ **SURETY** _____

By: _____ By: _____
(Name of Contractor) Attorney-in-Fact

Attest: _____ Attest: _____

Countersigned Massachusetts Resident Agent –

By: ……..

Surety Agent Address

……

Surety Agent Phone Number

……

PAYMENT BOND

LABOR AND MATERIALS

KNOW ALL MEN BY THESE PRESENTS:

That we, …… as **Principal**, (hereinafter called Contractor), and ……as **Surety**, (hereinafter called Surety), are held and firmly bound unto the **City of Marlborough**, as **Obligee**, (hereinafter called City), in the sum of …….…
dollars ($.....) lawful money of the United States of America, to be paid to the City, for which payments, well and truly to be made, we bind ourselves, our respective heirs, executors, administrators, successors and assigns, jointly and severally, firmly by these presents.

WHEREAS the said **Contractor** has by written agreement dated ……. entered into a Contract with the City for the project of …… in Marlborough Massachusetts which contract is by reference made a part hereof, and is hereinafter referred to as the Contract.

NOW THEREFORE, THE CONDITIONS OF THIS OBLIGATION are such that if the **Contractor** and all subcontractors under said contract shall pay for all labor performed or furnished and for all materials used or employed in said contract and in any and all duly authorized modifications, alterations, extensions of time, changes or additions to said contract that may hereafter be made, notice to the **Surety** of such modifications, alterations, extensions of time, changes or additions being hereby waived, the foregoing to include any other purpose or items set out in, and to be subject to, provisions of Massachusetts General Laws Chapter 30, §39A, and Chapter 149, §29, as amended, then this obligation shall become null and void; otherwise it shall remain in full force and virtue.

IN WITNESS WHEREOF, we hereunto set our hands and seals this …… day of ……, 20__.

PRINCIPAL __ _____ **SURETY** _____

By: _____ By: _____
(Name of Contractor) Attorney-in-Fact

Attest: _____ Attest: _____

Countersigned Massachusetts Resident Agent –

By: ……..

Surety Agent Address

……

Surety Agent Phone Number

……

(General Contractor)
REQUIRED FOR CONTRACTS WITH A VALUE OF $100,000 OR MORE

SAMPLE

TO BE SUBMITTED ON C.P.A.'S LETTERHEAD

SAMPLE LETTER FROM CPA REGARDING CONTRACTOR ACCOUNTING CONTROLS

DATE:

City of Marlborough – Department of Public Works
City Engineer
135 Neil Street
Marlborough MA 01752

RE: Contract ED 2014-14

Dear City Engineer,

Please be advised that we have reviewed the Statement of Internal Accounting Controls prepared by the general contractor, NAME OF GENERAL CONTRACTOR, in connection with the above-captioned project. This statement is required under M.G.L. Ch. 30, § 39R. In our opinion, representations of management are consistent with our evolutions of the system of internal accounting controls. In addition, we believe that they are reasonable with respect to transactions as assets in the amount which would be material when measured in relation to the firm's financial statements.

Sincerely,

(C.P.A.)

REQUIRED FOR CONTRACTS WITH A VALUE OF $100,000 OR MORE

SAMPLE

TO BE SUBMITTED ON CONTRACTOR'S LETTERHEAD

SAMPLE LETTER FROM CONTRACTOR REGARDING ACCOUNTING CONTROLS

DATE:

City of Marlborough – Department of Public Works
City Engineer
135 Neil Street
Marlborough MA 01752

RE: Contract ED 2014-14

Dear City Engineer,

This letter is being submitted pursuant to M.G.L. Ch. 30 §39R(c). Please be advised that our firm has a system of internal accounting controls which assure that:

(1) transactions are executed in accordance with management's general and specific authorization

(2) transactions are recorded as necessary, to permit preparation of financial statements in conformity with generally accepted accounting principles, and to maintain accountability for assets

(3) access to assets is permitted only in accordance with management's general or specific authorization; and

(4) the recorded accountability for assets is compared with the existing assets at reasonable intervals and appropriate action was taken with respect to any difference.

Sincerely,

FORM OF CONTRACTOR'S EQUAL EMPLOYMENT CERTIFICATION
City of Marlborough
Department of Public Works – Engineering Division

This form must be completed and submitted by the Contractor prior to the signing of the Owner-Contractor Agreement.

This certifies that:

_____
Contractor

_____
Street Address

_____
City/State/Zip Code

1. Intends to use the following listed construction trades in the work under this contract:

_____

_____

_____

_____

_____

_____

2. Will comply with the minority manpower ratio and specific affirmative action steps contained in The Contract Documents; and

3. Will obtain similar certifications from each of its subcontractors and submit to the Owner prior to the award of any subcontract under this contract the subcontractor's certification.

_____
SIGNATURE OF AUTHORIZED REPRESENTATIVE OF CONTRACTOR

_____
NAME AND TITLE

_____
DATE

GENERAL CONDITIONS - INDEX

Index

1. Funding Source; Acknowledgment
2. Definitions
3. Contract Plans and Specifications
4. Additional Instructions and Detail Drawings
5. Shop or Setting Drawings
6. Materials Services and Facilities
7. Contractor's Title to Materials
8. Title to Work
9. Inspection and Testing of Materials
10. Express Warranty
11. Maintenance and Guarantee
12. "Or Equal" Clause
13. Surveys, Permits and Regulations
14. Contractor's Obligations
15. Site Protection and Weather Conditions
16. Protection of Work and Property - Emergency
17. Inspection
18. Reports, Records and Data
19. Superintendence by Contractor
20. Changes in Work/Extra Work/Limits of Work
21. Time for Completion and Liquidated Damages
22. Correction of Work
23. Subsurface Conditions Found Different
24. Right of Owner to Terminate Contract
25. Payments to Contractor and of Subcontractor
26. Indemnification
27. Substantial Completion, Final Completion, Acceptance and Final Payment
28. Insurance
    (a) Workman's Compensation Insurance
    (b) Contractor's Commercial General Liability, Contractor's Public Liability and Property Damage Insurance,
    (c) Vehicle Liability Insurance
    (d) Subcontractors Public Liability and Property Damage Insurance and Vehicle Liability Insurance
    (e) Excess/Umbrella Liability Coverage
    (f) Proof of Insurance:
    (g) City of Marlborough as Additional Insured and Certificate Holder
29. Contract Security, Performance and Payment Bonds
30. Assignments
31. Engineer's Authority
32. Use of Premises, Removal of Debris, Sanitary Conditions
33. Notice and Service Thereof

34. Other Prohibited Interests
35. Suspension of Work
36. Access to Records
37. Age Discrimination Act of 1975 (for contracts over$2,000)
38. Non-Discrimination
39. Non Federal Labor-Standards Provisions
40. Schedule of Salaries and Wages
41. Labor Provisions
42. Environmental Requirements
43. "Right to Know" Law
44. Archaeological and Historic Preservation
45. Interest of Contractor and Employees
46. Statement of Management, CPA Statement
47. Severability
48. Confidentiality
49. Executive Orders
50. Compliance with Chapter 370 of the Acts of 1963
51. Foreign Corporations
52. Applicable Law
53. Asbestos
54. As-Built Plans
55. Miscellaneous

GENERAL CONDITIONS

1. Funding Source

Where contract undertakings of the City are funded, in whole or in part, by any state or federal agency, the City shall have the right to delegate any or all of its rights and responsibilities under this contract to said agencies.

2. Definitions

2.1 Addenda - Written or graphic instruments issued prior to the execution of the Agreement which modify or interpret the Contract Documents, Drawings and Specifications, by additions, deletions, clarifications or corrections.

2.2 Bid - The offer or proposal of the Bidder submitted on the prescribed form setting forth the prices for the Work to be performed.

2.3 Bidder - Any person, firm or corporation submitting a Bid for the Work.

2.4 Bonds - Bid, Performance and Payment Bonds, and other instruments of security, furnished by the Contractor and/or its Surety, in accordance with the Contract Documents.

2.5 Change Order - A written order to the Contractor executed by both parties authorizing an addition, deletion or revision in the Work within the general scope of the Contract Documents, or authorizing an adjustment in the Contract Price or Contract Time.

2.6 Contract Documents - The Contract, including but not limited to, Notice to Bidders, Instruction to Bidders, Form for General Bid, Certification of Bidder Regarding Equal Employment Opportunity. Form of Owner/Contractor Agreement, Form of Corporate Vote, Performance Bond, Payment Bond, Form of Contractor's Statement of Management, Form of CPA's Statement of Contractor's Accounting Controls, Form of Contractor's Equal Employment Certification, General Conditions, Special Conditions, General Contractor's Guarantee Form, Specifications, Appendices, Change Orders, Plans and Addenda.

2.7 Contract Price - The total moneys payable to the Contractor under the terms of conditions of the Contract Documents.

2.8 Contract Time - The number of calendar days stated in the Contract Documents for the completion of the Work.

2.9 Contractor - The person, firm or corporation with whom the Owner has executed the Agreement.

2.10 Drawings - The part of the Contract Documents which show the characteristics and scope of the work to be performed and which have been prepared or approved by the Engineer.

2.11 Engineer - The City Engineer, designee, individual or firm authorized by the Owner to prepare and review the technical specifications and drawings which the Contractor shall follow in performing the Work.

2.12 Field Order - A written order effecting a change in the Work not involving an adjustment in the Contract Price, or an extension of the Contract Time, issued by the Engineer to the Contractor during construction.

2.13 Notice of Award - The written notice from the Owner to the successful Bidder of acceptance of the Bid.

2.14 Notice to Proceed - Written communication issued by the Owner to the Contractor authorizing it to proceed with the Work and establishing a date of commencement and completion of the Work.

2.15 Owner - A public or quasi-public body or authority, corporation, association, partnership, or individual with whom the Contractor has executed the Agreement, and for whom the Work is to be performed,

2.16 Plans - The Contract Drawings, or exact reproductions thereof, which show the scope, character, dimensions and details of the Work, and which have been prepared or approved by the Engineer.

2.17 Project - The undertaking to be performed as provided in the Contract Documents.

2.18 Project Representative - The duly authorized representative of the Owner.

2.19 Resident Project Engineer - The representative of the Owner who is assigned to the Project site or any part thereof and reports to Project Representative. Resident Project Engineer shall have no authority to bind the Owner to expend funds in excess of appropriated funds, or to modify the specifications, or to suspend or terminate the work.

2.20 Shop Drawings - All drawings, diagrams, illustrations, brochures, schedules and other data which are prepared by the Contractor, a subcontractor, manufacturer, supplier or distributor, which illustrate how specific portions of the Work shall be fabricated or installed.

2.21 Specifications - A part of the Contract Documents consisting of written descriptions of a technical nature of materials, equipment, construction systems, standards, basis of payment and workmanship.

2.22 Special Conditions or Provisions - Revisions or additions to the General Conditions, Supplemental General Conditions or Specifications applicable to an individual project.

2.23 Subcontractor - An individual, firm or corporation having a direct contract with the Contractor or with any other Subcontractor for the performance of a part or whole of the Work at the site.

2.24 Substantial Completion - That date as certified by the Engineer when the construction of the Project or a specified part thereof is sufficiently completed in accordance with the Contract Documents, so that the Project or specified part can be utilized for the purposes for which it is intended.

2.25 Supplier - Any person or organization who supplies materials or equipment for the Work, including that fabricated to a special design, but who does not perform labor at the site.

2.26 Work - All labor necessary to produce the construction required by the Contract Documents, and all materials and equipment incorporated or to be incorporated in the Project.

3. Contract Plans and Specifications

All plans, specifications and addenda, hereinafter enumerated or referenced in this contract, shall form part of this Contract and the provisions thereof shall be as binding upon the parties hereto as if they were herein set fully forth. The table of contents, titles, headings, running headlines and marginal notes contained herein and in said documents are solely to facilitate reference to various provisions of the Contract Documents and in no way affect, limit or cast light on the interpretation of the provisions to which they refer.

The Drawings, Specifications and other documents prepared by the City's Engineering Division, and copies thereof furnished to the Contractor, are for the use solely with respect to this Project. They are not to be used by the Contractor or any Subcontractor, Sub-subcontractor, or material or equipment supplier on other projects or for additions to this Project outside the scope of the Work without specific written consent of the Engineer.

4. Additional Instructions and Detail Drawings

The Owner may in its discretion provide the Contractor with additional instructions and detail drawings as necessary to carry out the work included in the contract, and the Contractor shall carry out the work in accordance with the same. The Contractor shall prepare for approval by the Engineer: (a) a schedule, fixing the dates at which special detail drawings will be required, such drawings, if any, to be furnished by the Engineer in accordance with said schedule, and (b) a schedule fixing the respective dates for the submission of shop drawings, the beginning of manufacture, testing and installation of materials, supplies and equipment, and the completion of the various parts of the work; each such schedule to be subject to change from time to time in accordance with the progress of the work.

5. Shop or Setting Drawings

The Contractor shall submit promptly to the Engineer three (3) copies of each shop or setting drawing prepared in accordance with the schedule predetermined as aforesaid. After examination of such drawings by the Engineer and the return thereof, the Contractor shall make such corrections to the drawings as have been indicated and shall furnish the Engineer with three (3) corrected copies. The Contractor shall furnish additional copies as requested by the Engineer. Regardless of corrections made in or approval given to such drawings by the Engineer, the Contractor shall nevertheless be responsible for the accuracy of such drawings and for their conformity to the plans and specifications, unless Contractor notifies the Engineer in writing of any deviations at the time such drawings are furnished.

6. Materials, Services and Facilities

6.1 Except as otherwise specifically stated in the Contract Documents, the Contractor shall provide and pay for all materials, labor, tools, equipment, water, light, power, transportation, superintendence, temporary construction of every nature and all other services and facilities of every nature whatsoever necessary to execute, complete and deliver the work within the specified time.

6.2 Materials and Equipment to be installed as part of the Contract (both or either of which are hereinafter referred to as "Materials") shall be new, unused, of recent manufacture, assembled and used in accordance with best construction practices.

6.3 Materials specified by reference to the number or symbol of a specific standard (such as A.S.T.M. Standard, a Federal Specification or other similar standard), shall comply with requirements of the most recent revision thereof and any amendment or supplement thereto in effect on the date of the Advertisement, except as limited to type, class or grade, or modified in such reference. The standards referred to, except as may be modified by the Contract Documents, shall have full force and effect as though printed therein.

6.4 When requested by the Engineer, the Contractor shall submit Certificates of Compliance from the manufacturer, certifying that the equipment materials comply with the requirements of the specifications or standards. Such certification shall be in the following form:

(sample - on manufacturer's letterhead)
CERTIFICATE OF COMPLIANCE
- (manufactured or fabricated materials) -

Date: _____, 20___

This certifies that _____
(description, kind of material, Model No., etc.)

Furnished to _____
(name of contractor, general or sub)

For use on _____
(project name)

In the amount of _____
(quantity represented)

Identified by _____

Shipped on _____, 20___, Delivered on _____, 20___

Shipped via _____
(method of shipment, Car No., Truck No.)

Meets the requirements of the pertinent project plans, special conditions and specifications of the subject project in all respects. Processing, product testing and inspection control of raw material are in conformance with all applicable specifications, drawings and/or standards of all articles furnished.

All records and documents pertinent to this Certificate and not submitted herewith shall be maintained available by the undersigned for a period of not less than three years from the date of the Certificate.

_____
(name of manufacturer)

By: _____
(name and title of authorized signatory)

7. Contractor's Title to Materials

No materials or supplies for the work shall be purchased by the Contractor or by any Subcontractor subject to any chattel mortgage or under a conditional sale contract or other agreement by which an interest is retained by the seller. The Contractor warrants that it has good title to all materials and supplies used by him in the work, free from all liens, claims or encumbrances.

The Contractor shall obtain all necessary rights and licenses to allow the Owner to use the goods and services provided by this Agreement in full compliance with any and all copyright, patent rights or licenses, without requiring additional payment by the Owner.

8. Title to Work

The title to all work completed and in the course of construction and of all material on account of which any payment has been made shall be in the Owner.

9. Inspection and Testing of Materials

All materials and equipment used in the construction of the project shall be subject to inspection and testing by the Owner, or its designee, in accordance with accepted standards to establish conformance with specifications and suitability for uses intended. Nevertheless, said inspection and/or testing, or a lack thereof, shall not relieve the Contractor of its obligations under the terms and conditions of the Contract Documents.

The City shall, at all times and places have access to and be permitted to observe and review all work, materials, equipment, payrolls, personnel records, employment conditions, material invoices, contract, book of account, and other relevant data and records.

After receiving written notice that certain work or construction is improper, unsafe or defective or in any way fails to conform to the Contract, the Contractor shall forthwith remove such unsafe, improper or defective work and reconstruct the same in a manner satisfactory to the Engineer. Upon failure of the Contractor to remedy the work after being so notified, the Engineer may cause such defective work to be remedied or replaced and the City may deduct the cost thereof from any moneys due or to become due the Contractor.

If any work is covered up without approval of the City, it, must, if requested by the City, be uncovered at the expense of the Contractor. Should the City consider it necessary or advisable, at any time before final acceptance of the entire work, to make an examination of work already completed, by removing or tearing out same, the Contractor shall on request promptly furnish all necessary facilities, labor, and material. If such work is found to be defective in any material respect, the Contractor shall defray all expenses of such examination and of satisfactory reconstruction. If, however, such work is found to meet the requirements of the Contract, the cost of uncovering and replacement shall be covered by an appropriate Change Order adjusting the Contract amount accordingly.

10. Express Warranty

The Contractor guarantees to Owner that all materials incorporated into the work shall be new unless otherwise specified or agreed by the Parties. Contractor also guarantees that all work shall be done in a workmanlike manner, free from defects, and in conformance with any and all specifications contained in the Contract Documents.

The work performed by the Contractor shall conform to the high professional standard of care and practice customarily expected of those engaged in performing comparable work, the personnel furnishing said services shall be qualified and competent to perform adequately the services assigned to them and the recommendations, guidance and performance of such personnel shall reflect such standards of professional knowledge and judgment.

The Contractor shall promptly remedy any defects due to faulty materials or workmanship and pay for any damage to the work resulting there from which shall appear within a period of one year from the date of the City's use or occupancy of the project as a whole. In the event that the project is scheduled to be completed in specific groups or portions, or the City, at its election, accepts groups or portions of the project for use or occupancy, then the warranty period for such group or portion will commence at the time of its completion or acceptance. The City shall give notice of observed defects with reasonable promptness.

Neither partial or final payment, nor any provision in this article, nor partial or entire use or occupancy of the premises by the City shall constitute an acceptance of work not done in accordance with the Contractor or relieve the Contractor of liability in respect to any express warranties, special guarantees, or in respect to faulty materials or workmanship, in accordance with the law of the place of building.

The Contractor warrants good title to all materials, supplies and equipment incorporated in the work and agrees to deliver the premises together with all improvements thereon free from any claim, liens, or charges, and agrees further that neither he nor any other person, firm or corporation shall have any right to a lien upon the premises or anything appurtenant thereof.

11. Maintenance and Guarantee

The Contractor guarantees that all work performed under this contract shall meet fully all requirements thereof as to quality of workmanship and of materials. The Contractor hereby agrees to make at its own expense any repairs or replacements made necessary by defects in materials or workmanship that become evident within one (1) year after the date of the final payment, and to restore to full compliance with the requirements set forth herein any part of the work constructed hereunder, which during said one (1) year period is found by the Owner to be deficient with the respect to any provisions of the specifications. The Contractor shall hold the Owner harmless from claims of any kind arising from damage due to said defects. The Contractor shall make all repairs and replacements promptly upon receipt of written orders for same from the Owner. If the Contractor fails to make the repairs and replacements promptly and within ten (10) days from the date of giving or mailing such notice, the Owner may do the work

and the Contractor shall be liable to the owner for the full cost thereof. This one (1) year guarantee shall not limit any express guaranty or warranty provided elsewhere in the Contract.

Guarantees and warranties required by the Specifications must be delivered to the Engineer before final payment to the Contractor may be made. The failure to deliver a required guarantee or warranty shall constitute a failure to fully complete the Work in accordance with the Contract Documents.

The Owner will discharge or release the performance bond after the expiration of one year from the time of completion provided that no claim filed under said bond is pending, and provided further, that no such bond shall be discharged or released prior to the expiration of all special guarantees provided for in the Specifications in accordance with MGL c.30, §30, as amended.

12. "Or Equal" Clause

Whenever a material, article or piece of equipment is identified on the plans or in the specifications by reference to manufacturers' or vendors' names, trade names, catalogue numbers, etc., it is intended merely to establish a standard; and, any materials, article or equipment of other manufacturers and vendors which will perform adequately the duties imposed by the general design shall be considered equally acceptable provided the material, article or equipment so proposed is, in the opinion of the Engineer, of equal substance and function. It shall not be purchased or installed by the Contractor without the Engineer's prior written approval. Notwithstanding any provision to the contrary, the requirements of MGL c. 30, § 39M(a) are hereby incorporated and made a part of this Agreement.

The Contractor warrants to the City that all materials and equipment furnished under the Contract will be new unless otherwise specified, and that all work will be of good quality, free from faults and defects, and in conformance with the Contract. Where the materials, equipment, articles or workmanship are referred to in the Technical Specification as “equal to” any particular standard, the City shall decide the question of equality. Before any material is incorporated into the work under this Contract, the Contractor may be required to furnish, without expense to the City, a complete statement attesting to the origin, composition and manufacture of any or all materials proposed to be used in the construction of the work, together with samples, which samples may be subjected to the tests required by the City to determine the quality and fitness of the material. In any event, all materials shall meet the Massachusetts Highway Standard Specifications previously referenced.

13. Surveys, Permits and Regulations

Unless otherwise expressly provided for in the specifications, the Owner shall furnish to the Contractor all surveys necessary for the execution of the work. The Owner, however, does not warrantee or guarantee the accuracy or completeness of said surveys. The Contractor shall carefully study and compare the Contract Documents with each other and with information furnished by the Owner and shall at once report to the Engineer errors, inconsistencies or

omissions discovered. If the Contractor performs any construction activity knowing it involves a recognized error, inconsistency or omission in the Contract Documents without such notice to the Engineer, the Contractor shall assume responsibility for such performance and shall bear the costs attributable for correction. The Contractor shall take field measurements and verify field conditions and shall carefully compare such field measurements and conditions and other information known to the Contractor with the Contract Documents before commencing activities. Errors, inconsistencies, or omissions discovered shall be reported to the Engineer at once.

The Contractor shall procure and pay for all permits, licenses and approvals necessary for the execution of this contract as provided in Article 12 of the Instructions to Bidders, and shall comply with Massachusetts General Laws and the Owner's requirements as provided in Section 9.4 and 9.5 of the Instructions to Bidders, and Article 28 below with respect to bonding and other insurance requirements.

The Contractor shall thoroughly familiarize himself with the standard licensing requirements of the City of Marlborough.

The Contractor shall comply with all laws, ordinances, rules, orders and regulations relating to performance of the work, the protection of adjacent property and the maintenance of passageways, guard fences or other protective facilities. It is not the Contractor's responsibility to ascertain that the Contract Documents are in accordance with applicable laws, statutes, ordinances, building codes, and rules and regulations. However, if the Contractor observes that portions of the Contract Documents are at variance therewith, the Contract shall promptly notify the Engineer in writing, and necessary changes shall be accomplished by appropriate modification. If the Contractor performs Work knowing it to be contrary to laws, statutes, ordinances, building codes and rules and regulations without such notice to the Engineer, the contractor shall assume full responsibility for such Work and shall bear the costs attributable.

The Contractor shall comply with and give notices required by laws, ordinances, rules, regulations, and lawful orders of public authorities bearing on the performance of the Work.

14. Contractor's Obligations

The Contractor shall enforce strict discipline and good order among the Contractor's employees and other persons carrying out the Work. The Contractor shall not permit employment of unfit persons or persons not skilled in tasks assigned to them, and whenever the Owner shall notify the Contractor, in writing, that any workers is, in its opinion, incompetent, unfaithful, disorderly, or otherwise unsatisfactory, such employee shall be discharged from the Work and shall not again be employed on the Project except with the consent of the Owner.

The Contractor shall, in good and workmanlike manner, perform all work and furnish all supplies and materials, machinery, equipment, facilities and means, except as herein otherwise expressly specified, as are necessary and/or proper to perform and complete all the work required by this Contract, within the time herein specified, in accordance with the provisions of this Contract and said specifications and in accordance with the plans and drawings covered by this

Contract any and all supplemental plans and drawings, and in accordance with the directions of the Engineer as may be given from time to time during the progress of the work. Contractor shall furnish, erect, maintain and remove such facilities, equipment, material and temporary works as may be required.

The Contractor shall be responsible for the proper fitting of all Work and the coordination of the operations of all trades, Subcontractors, or material, men engaged upon the Work. All necessary cutting, coring, drilling, grouting, and patching required to fit together the several parts of the Work shall be done by the Contractor, except as may be specifically noted otherwise under any particular section of the Specifications. The Contractor shall be responsible to the Owner for acts and omissions of the Contractor's employees, Subcontractors, and their agents and employees, and other persons performing portions of the Work. The Contractor shall be responsible for inspection of portions of the Work already performed under this Contract to determine that such portions are in proper condition to receive subsequent Work. The Contractor shall do engineering required for establishing grades, lines, levels, dimensions, layouts, and reference points for the trades; shall be responsible for maintaining bench marks and other survey marks; and shall replace any bench marks or survey marks which have been disturbed or destroyed.

The Contractor shall observe, comply with, and be subject to all terms, conditions, requirements and limitations of the Contract and specifications, and shall perform, carry on and complete the entire work to the satisfaction of the Engineer and the Owner.

Attention is directed to the provisions of Article 32 of Mass. Standard Specifications relating to the rights of public service corporations and municipal departments to enter the site of the improvements and to alter, replace and/or install facilities at some time when the Contractor will be prosecuting other required work contiguous thereto. The Contractor shall cooperate fully with requirements under said Article.

The Contractor's attention is directed to the fact that all applicable State Laws, Municipal Ordinances and Rules and Regulations of all authorities having jurisdiction shall apply to the Contract throughout, and they will deem to be included in the Contract the same as though herein written out in full.

15. Site Protection and Weather Conditions

The Contractor shall take precautions during the execution of work involving demolition not to disturb or damage any existing structures, landscaping, walks, roads, or other items scheduled to remain. The Contractor shall restore any damaged items to original condition and as directed by the Engineer. The Contract shall provide and erect acceptable barricades, fences, signs and other traffic devices to protect the work from traffic and the public as reasonably necessary and as required by applicable law, code or regulation.

In the event of temporary suspension of work, or during inclement weather, or whenever the Engineer with the Owner's approval shall direct, the Contractor shall, and shall cause its

subcontractors to, protect carefully all work and materials against damage or injury from the weather. If, in the opinion of the Engineer, any work or materials have been damaged or injured by reason of failure on the part of the Contractor or any of its subcontractors to so protect such work, said materials shall be removed and replaced at the expense of the Contractor.

16. Protection of Work and Property - Emergency

The Contractor shall at all times safely guard the Owner's property from injury or loss in connection with this Contract, and shall at all times safely guard and protect its own work, and that of adjacent property from damage. The Contractor shall replace or make good any such damage, loss or injury unless such be caused directly by errors contained in the Contract or by the Owner, or its duly authorized representatives.

Special care shall be exercised to prevent any disturbance to and protect such underground public service structures and facilities as may be near any work to be done by the Contractor. In addition, care shall be taken to keep heavy equipment and miscellaneous machinery off any private property. Any damages incurred by private homeowners as a result of this construction shall be repaired at the expense of the Contractor.

In case of an emergency which threatens loss or injury of property, and/or safety of life, the Contractor is allowed to act, without previous instructions from the Engineer, in a diligent manner to prevent said loss or injury. Contractor shall immediately notify the Engineer and Owner in writing thereafter, and shall promptly submit any resulting claim for extra work to the Engineer.

Where the Contractor has not taken action but has notified the Engineer of an emergency threatening loss or injury to persons or property, or damage to the work or any adjoining property, it shall act as instructed or authorized by the Engineer.

The amount of extra payment claimed by the Contractor on account of any emergency action shall be determined in the manner provided in Paragraph 20 below.

17. Inspection

The authorized representatives and agents of the Owner and/or the Commonwealth, shall be permitted to inspect all work, materials, payrolls, records of personnel, invoices of materials and other relevant data and records.

Unless otherwise required by the Contract Documents, or directed in writing by the Engineer, Work shall be done during regular working hours of 7:00 AM and 3:30 PM, Monday through Friday. However, if the Contractor desires to carry on the Work outside of regular working hours or on Saturdays, Sundays, or Massachusetts holidays, it shall allow ample time to enable satisfactory arrangements to be made for inspecting Work in progress and shall bear the costs of such inspection. The Owner shall bill the Contractor directly for such costs. Work done outside of regular working hours without the consent or knowledge of the Engineer, shall be subject to additional inspection and testing as directed by the Engineer. The cost of this

inspection and testing shall be paid by the Contractor whether the Work is found to be acceptable or not.

If any work is covered up without approval of the Engineer, it must, if requested by the Owner, be uncovered at the expense of the Contractor. If such work is found to be defective in any material respect, the Contractor shall defray all expenses of such examination and of satisfactory reconstruction.

18. Reports, Records and Data

The Contractor shall submit to the Owner such schedule of quantities and costs, progress schedules, payrolls, OSHA cards, reports, estimates, records and other data as the Owner may request concerning work performed or to be performed under this Contract. All records shall be retained by the Contractor for a period of seven years from completion of the work.

All documents produced pursuant to this Agreement shall be the property of the Owner.

All information required from the Owner, or from others at the expense of the Owner, in the performance of this Agreement shall be and remain the property of the Owner. This includes, but is not limited to, all records, data files, computer records, work sheets, deliverable products (complete and incomplete) and all other types of information prepared or acquired by the Contractor in the performance of this Agreement. The requirements of MGL c. 30, § 39R are hereby incorporated and made a part of this Agreement.

19. Superintendence by Contractor

At the site of the work, the Contractor shall employ a construction superintendent or foreman who shall have full authority to act for the Contractor, and shall be acceptable to the Engineer and Owner, and shall be a person anticipated to be continued in that capacity for the duration of the Agreement. The requirements of MGL c. 30, §§39I and 39N are hereby incorporated and made a part of this Agreement.

20. Changes in Work/Extra Work/Limits of Work

20.1 The Contractor shall make no changes in the work without prior written approval of the Owner, however, the Owner may at any time by written order, and without notice to any sureties, require the performance of such extra work or changes in the work as may be found necessary or desirable. No payment for extra work of any kind will be allowed unless expressly approved and authorized by the City in writing through a signed Change Order. Limits of work and descriptive notes on contract drawings are approximate and are only intended to generally describe the area of work required to achieve the correct improvements sought under this Contract. The requirements of MGL c.30, §§39N and 39O are hereby incorporated and made a part of this Agreement.

20.2 The Engineer may authorize minor changes or alterations in the work which do not involve any extra cost or expense, and which are not inconsistent with the overall intent

of the Contract Documents. If the Contractor determines that any such minor change or alteration so authorized by the Engineer entitles Contractor to an increase in the contract price, the Contractor shall be required to obtain prior written approval from the Owner as per paragraph 20.1 above.

20.3 Any Change Order or minor change in the Work must be counter-signed by the Owner or its authorized agent to be effective. All Change Orders will be authorized in accordance with M.G.L. c.44, §31C, as amended.

20.4 The Contractor shall perform all work as directed by Engineer, and if the Engineer determines that certain work for which the Contractor has requested a change order does not represent a change in the Contract, or if the Contractor and the Owner or Engineer cannot agree to the amount of compensation for a change order, the Contractor shall perform said work under protest and must follow the notice requirements and maintain records required by subparagraph 20.8.3.

20.5 The Contractor's attention is directed to M.G.L. Chapter 30, §§ 39I, 39J, 39N, 39O and 39P, as amended, the provisions of which apply to this Contract.

20.6 **Timely Decision By Owner M.G.L. C.30 §39P**

Whenever this Contract requires the Owner or its Engineer to make a decision during construction of the Project, on interpretation of the specifications, approval of equipment, material or any other approval, or progress of the work, that decision shall be made promptly and, in any event, no later than thirty (30) days after receipt of a written submission for such decision by the Contractor; but if such decision requires extended investigation and study, the Owner or the Engineer shall, within thirty (30) days after the receipt of the submission, give the Contractor written notice of the reasons why the decision cannot be made within the thirty day period and the date by which the decision will be made as required by **M.G.L. c.30 §39P**, as amended.

20.7 ***Deviations From Plans & Specifications M.G.L. C.30 §I***

The Contractor having a contract for the construction, alteration, maintenance, repair or demolition of, or addition to, any public works for the commonwealth, or of any political subdivision thereof, shall perform all the work required by such contract in conformity with the plans and specifications contained therein. No willful and substantial deviation from said plans and specifications shall be made unless authorized in writing by the awarding authority or by the engineer or architect in charge of the work who is duly authorized by the awarding authority to approve such deviations. In order to avoid delays in the prosecution of the work required by such contract such deviation from the plans or specifications may be authorized by a written order of the awarding authority or such engineer so authorized to approve such deviation. Within thirty (30) days thereafter, such written order shall be confirmed by a certificate of the awarding authority stating: (1) If such deviation involves any substitution or elimination of materials, fixtures or

equipment, the reasons why such materials, fixtures or equipment were included in the first instance and the reasons for substitution or elimination, and, if the deviation is of any other nature, the reasons for such deviation, giving justification therefor; (2) that the specified deviation does not materially injure the project as a whole; (3) that either the work substituted for the work specified is of the same cost and quality, or that an equitable adjustment has been agreed upon between the contracting agency and the contractor and the amount in dollars of said adjustment; and (4) that the deviation is in the best interest of the contracting authority.
Such certificate shall be signed under the penalties of perjury and shall be a permanent part of the file record of the work contracted for under this Contract. The awarding authority is not obligated to pay for change orders that are not approved in writing in accordance with Subparagraph 20.1 as required by **M.G.L. c.44 §31C and c.30 §39I**, as amended.

20.8 ***Claims***

.1 If the Contractor has any claim or dispute of any nature arising under this Contract, including a claim based on the Owner's failure or refusal to approve a change order request of the Contractor, in full or in part, the Contractor shall submit such claim or dispute to the Engineer in the form of a change order request, for initial review and consideration, subject to further appeal to the Owner's Representative. If the Contractor is not satisfied with the Engineer's decision or, if the Engineer fails to render a decision within thirty (30) days after receiving written notice of such claim or dispute from the Contractor, the Contractor may file a written request for a appeal with the Owner pursuant to Subparagraph 2.

.2 Appeal of an Engineer's decision under Subparagraph 1 must be made directly to the Owner's Representative by certified mail, copy to the Engineer and Owner, within twenty-one (21) calendar days after the date on which the party making the appeal receives the Engineer's written decision or within twenty-one (21) days after the thirty (30) day non-decision period noted in 6.7.1. Failure to appeal within this period will result in the Engineer's decision becoming final and binding upon the Owner and the Contractor.

.3 Pending resolution of the claim or dispute, the Contractor must proceed with the disputed Work, as directed by the Engineer. The Contractor must give written notice to the Owner and the Engineer stating that it is proceeding with the disputed work under protest. Accurate records of the nature and extent of the disputed Work and of the time spent and equipment used on the disputed Work shall be maintained by the superintendent and verified daily by the Project Representative, or the Owner's designee. Failure of the Contractor to maintain such records shall cause the Contractor to forfeit its claim to additional compensation for such disputed work.

.4 Meetings or administrative conferences may be held by the Owner to review the basis of the claim or dispute.

.5 At the conclusion of these proceedings, the Owner shall issue a decision which shall be final under the Contract. The matter may then be appealed to a court of competent jurisdiction.

.6 Requests for administrative conferences by subcontractors must be made by the Contractor; subcontractors cannot make such requests directly.

21. Time for Completion and Liquidated Damages

It is hereby understood and mutually agreed, by and between the Contractor and the Owner, that the date of beginning and the time for completion of the work to be done hereunder are ESSENTIAL CONDITIONS of this Contract; and it is further mutually understood and agreed that the work embraced in this Contract shall be commenced on a date to be specified in the "Notice to Proceed." By executing the Contract, the Contractor confirms that the contract time is a reasonable period for performing the Work. The Contractor shall proceed expeditiously with adequate forces and shall achieve Substantial Completion with the contract time.

The Contractor shall prosecute the work regularly, diligently, without interruption and at such rate of progress as will ensure full completion thereof within the time specified. It is expressly understood and agreed, by and between the Contractor and the Owner, that the time for the completion of the work described herein is a reasonable time for the completion of the same, taking into consideration the average climatic range and usual industrial conditions prevailing in this locality.

If the Contractor neglects, fails or refuses to complete the work within the time herein specified, or any proper extension thereof granted by the Owner, then the Contractor does hereby agree, as a partial consideration for the awarding of this Contract, to pay to the Owner the amount of $500.00, not as a penalty but as liquidated damages for such breach of contract as hereinafter set forth, for each and every calendar day that the Contractor shall be in default after the time stipulated in the Contract for completing the work.

The said amount of liquidated damages is fixed and agreed upon by and between the Contractor and the Owner because of the impracticability and extreme difficulty of fixing and ascertaining the actual damages the Owner would sustain in such event and said amount shall be retained from time to time by the Owner from current periodic estimates.

It is further agreed that time is of the essence of each and every portion of this Contract and of the specifications wherein a definite and certain length of time is fixed for the performance of any act whatsoever; and where under the Contract an additional time is allowed for the completion of any work, the new time limit fixed by such extension shall be of the essence of this contract. Provided, that the Contractor shall not be charged with liquidated damages or any excess cost when the Owner determines that the Contractor is without fault and the Contractor's reasons for the time extension are acceptable to the Owner; provided, further,

that the Contractor shall not be charged with liquidated damages or any excess cost when the delay in completion of the work is due:

(a) To any preference, priority or allocation order duly issued by the Government.

(b) To unforeseeable cause beyond the control and without the fault of negligence of the Contractor, including, but not restricted to, acts of nature, or of the public enemy, acts of the Owner, acts of another Contractor in the performance of a contract with the Owner, fires, floods, epidemics, quarantine restrictions, strikes, freight embargoes and severe weather.

(c) To any delays of Subcontractors or suppliers occasioned by any of the causes specified in subsections (a) and (b) of this article.

Provided further, that the Contractor shall within ten (10) days from the beginning of such delay, notify the Owner, in writing, of the causes of the delay, and provide such additional information as the Owner may require, and the Owner shall ascertain the facts and extent of the delay and notify the Contractor within a reasonable time of its decision in the matter.

22. Correction of Work

All work, all materials, whether incorporated in the work or not, all processes of manufacture, and all methods of construction shall be at all times and places subject to the inspection of the Engineer who shall be the final judge of the quality and suitability of the work, materials, processes of manufacture and methods of construction for the purposes for which they are used. Should they fail to meet the Engineer's approval they shall be forthwith reconstructed, made good, replaced and/or corrected, as the case may be, by the Contractor at its own expense. Rejected materials shall immediately be removed from the site. If, in the opinion of the Engineer, it is undesirable to replace any defective or damaged materials or to reconstruct or correct any portion of the work injured or not performed in accordance with the Contract Documents, the payment to the Contractor hereunder shall be reduced by such amount as in the judgment of the Engineer shall be equitable.

23. Subsurface Conditions Found Different

Should the Contractor encounter subsurface and/or latent conditions at the site materially differing from those shown on the plans or indicated in the specifications, Contractor shall, prior to disturbing such conditions, immediately provide written notice to the Engineer of such conditions. The Engineer shall thereupon promptly investigate the conditions, and if it is determined that such conditions materially differ from those shown on the plans or indicated in the specifications, the Engineer will at once make such changes in the plans and/or specifications as may be necessary. Any increase or decrease of cost resulting from such changes shall be adjusted in the manner provided in Paragraph 20 of these General Conditions. Notwithstanding any provision to the contrary, the requirements of MGL c. 30, § 39N are hereby incorporated and made a part of this Agreement.

24. Right of Owner to Terminate Contract

The Owner may terminate this Contract by providing the Contractor and the Surety with ten (10) days written notice specifying the reasons for termination, including but not limited to those set forth below:

(a) Violation of any of the provisions of this Contract by the Contractor or any of its subcontractors.

(b) A determination by the Owner that the Contractor has engaged in fraud, waste, mismanagement, misuse of funds, or criminal activity with any funds provided by this Contract.

(c) Failure of the Contractor, for any reason, to fulfill in a timely and proper manner its obligations under this Contract including, but not limited to, compliance with applicable federal, state or local laws or regulations.

If the Owner terminates or suspends this Agreement for one or more of the reasons set forth in (a) through (c), the Contractor shall have a right only to payment for work performed and accepted prior to said termination or suspension, and shall have no right to recover indirect or consequential damages, including but not limited to lost profits.

In the event of any such termination, the Surety shall have the right to take over and perform the Contract. Provided, however, that if the Surety does not commence performance within ten (10) days from the date of the mailing of notice of termination to such Surety, the Owner may take over the work and prosecute the same to completion at the expense of the Contractor, and the Contractor and his Surety shall be liable to the Owner for any excess cost. If the Owner takes over the work, it may take possession of and utilize, at no cost, such equipment, material and temporary works as may be on the site.

Further, the Owner may terminate or suspend this Contract if local, state and/or federal funding are cancelled, revoked, reduced, suspended or terminated.

If the Owner determines that a continuation of work on the project would endanger the life, health, or safety of those working or living at or near the project site, or that immediate action is necessary to protect public funds and/or property, the Owner may suspend work or terminate this Agreement by providing written notice to the Contractor. Should the Owner terminate or suspend this Agreement for any of the reasons set forth herein, the Contractor shall have a right only to payment for work performed and accepted prior to said termination or suspension and shall have no right to recover indirect or consequential damages, including but not limited to lost profits.

25. Payments to Contractor and of Subcontractors

25.1 Payment to the Contractor shall be in accordance with the requirements MGL c. 30, § 39K, which is hereby incorporated and made a part of this Agreement. Before the first Application for Payment, the Contractor shall submit to the Engineer a schedule of values allocated to various portions of the Work, prepared on such form and supported by such data to substantiate its accuracy as the Engineer may require. This schedule, unless objected to by the Engineer, shall be used on a basis for reviewing the Contractor's Applications for Payment. The schedule of values shall contain a separate item for each Section of the Specifications broken down in such form as the Engineer may require. Each item in the schedule of values shall include its proper share of overhead and profit. Once each month, on a date established at the beginning of the Work, the Contractor shall deliver to the Engineer by hand or registered or certified mail with return receipt, an itemized Application for Payment, supported by such data substantiating the Contractor's right to payment as the Engineer may require, and reflecting retainage.

25.2 In preparing estimates, the material delivered on the site and preparatory work done may be taken into consideration.

25.3 Payment shall be contingent upon the Contractor submitting any and all required certified payroll reports to the Owner.

25.4 Payment to subcontractors shall be made in accordance with MGL c.30, §39F, as amended, as noted in this Article.

26. Indemnification

The Contractor hereby indemnifies and shall at all times save and hold harmless the City of Marlborough, and its officers, attorneys, employees, and agents, from and against any and all claims (including workers' compensation and wage claims), demands, suits, actions, liabilities, proceedings, losses, damages, penalties, judgments, and costs and expenses, including without limitation the costs and expenses of litigation, of or by anyone that in any way is caused by, arises out of, or is occasioned by the performance, activities, operations, conducts, negligence, or omissions of the Contractor, including breach, or any of its subcontractors, or the agents or employees of either, regardless of whether or not they are caused in part by a party indemnified hereunder. The existence of insurance shall in no way limit the scope of this indemnification.

The Contractor shall reimburse the Owner for damage to its property caused by the Contractor, its employees, agents, subcontractors or material men, including damages caused by his, its or their use of faulty, defective or unsuitable material or equipment, unless the damage is caused by the Owner's gross negligence or willful misconduct. The Contractor shall bear all losses resulting from the use or storage of explosives and highly inflammable materials and shall save the Owner harmless from all claims for bodily injuries or death to any person and from all claims for property damage for destruction arising out of the use or storage of explosives and highly inflammable materials.

27. Substantial Completion, Final Completion, Acceptance and Final Payment

27.1 Substantial completion shall be that point at which the work has been completed to the extent that the Owner may occupy and make use of the project for which it was intended.

Upon receipt of written notice from the Contractor that the work is substantially complete, the Engineer will promptly make an inspection to determine whether the work is acceptable under the terms of the Contract and whether same is substantially complete. The Engineer will issue a dated certificate which states that the work is substantially complete and accepted under the terms and conditions of the Contract, and a punch list of all items to be completed or corrected. The entire balance due the Contractor, less two percent (2%) retainage plus a retention based on the Engineer's estimate of the fair value of the punch list items, and cost of completing or correcting such items, and the estimated value of claims made relating to the project, shall be due and payable.

The general guarantee period for the work substantially complete shall begin on the date certified by the Engineer.

27.2 Final completion shall be that point at which all work on the project has been completed, all defective work has been corrected, and clean-up of the site and any debris has been accomplished. Unless a certificate of substantial completion has issued, the general guarantee period shall begin upon certification by the Engineer of final completion. The entire balance due the Contractor, less the estimated value of claims made relating to the project to the extent allowed by law, shall be due and payable within 35 days of the Contractor's written acceptance of the final estimate as required by MGL c. 30, § 39G.

27.3 The acceptance by the Contractor of final payment shall be and shall operate as a release to the Owner of all claims and all liability by the Contractor. No payment, however, final or otherwise, shall operate to release the Contractor or its Sureties from any obligations under this Contract, the performance and payment bonds, or any express or implied warranties. Prior to any final payment the contractor or subcontractor must submit all certified payrolls to the Owner and supply a lien release the states that all subcontractors working on this project have been paid for their work.

28. Insurance

The Contractor shall not commence work under this Contract until it has obtained and submitted proof to the Owner of all the insurance required under this paragraph and such insurance has been approved by the Owner. The form of proof shall be a Certificate furnished to the Owner within ten (10) days of receipt of notice of award of contract but no later than the time at which the Contractor executes the Contract.

(a) Workmen's Compensation Insurance:

The Contractor shall procure and shall maintain during the life of this Contract

Workmen's Compensation Insurance as required by applicable federal, state or local law, for all of its employees and, in case of any such work sublet, the Contractor shall require the subcontractor similarly to provide Workmen's Compensation Insurance for all of the latter's employees as required by law in the following limits: Cover A –Statutory and Coverage B Employer's Liability $500,000 each accident/$500,000 disease per employee/$500,000.disease policy.

(b) Contractor's Commercial General Liability, Contractor's Public Liability and Property Damage Insurance

The Contractor shall procure and shall maintain during the contract term, Commercial General Liability coverage with respect to the operations performed by any employee, Subcontractor, or supplier, bodily injury and property damage insurance in the amount of $1,000,000 per occurrence and $3,000,000 in the general aggregate, including products and completed operations, personal and advertising injury. This policy shall include coverage relating to explosion, collapse, and underground (XCU) property damage.

The Contractor shall procure and shall maintain during the contract term, on a per occurrence basis separate Owner's and Contractor's Public/Protective Liability Insurance in the name of the Owner at the same limits listed above.

The completed operations coverage shall be maintained for a period of two (2) years after Substantial Completion as defined in Subparagraph 27.1.
The property damage coverage shall include Special Perils coverage against loss or damage by fire and against loss or damage covered by the special perils insurance endorsement on all work in this Contract in an amount equal to at least 80% of the Contract Sum. This policy shall indicate if Stored Materials coverage is provided to include materials or equipment delivered at the site of the Work (or at some location agreed to in writing. The policy or policies shall specifically state that they are for the benefit of the Owner, the Contractor, and all persons furnishing labor or labor and materials for the Work, as their interests may appear. The Special Perils coverage shall include any costs for additional work performed by the Engineer or any consultant as the result of a loss experienced during the life of this Contract.

(c) Vehicle Liability Insurance:

The Contractor shall procure and shall maintain during the contract term, Vehicle Liability Insurance with respect to vehicle operations by any employee, including coverage of owned, non-owned, and hired vehicles, in the amount of $1,000,000 C.S.L.

(d) Subcontractor's Public Liability and Property Damage Insurance and Vehicle Liability Insurance:

The Contractor shall either (1) require each of its Subcontractors to procure and to maintain, during its subcontract term, occurrence basis Subcontractor's Public Liability and Property Damage Insurance and Vehicle Liability Insurance in the amount of $1,000,000, or (2) insure the activities of such subcontractors, in addition to its policy specified in subparagraph (b) hereof.

(e) Excess/Umbrella Liability Coverage

Umbrella or Excess Liability coverage following form of underlying General and Vehicle Liability coverage up to $5,000,000 as required C.S.L.
Existence of umbrella or excess liability coverage may serve to satisfy underlying limits for General Liability and Automobile Liability where a Contractor's existing limits do not meet the City's requirements.

(f) Proof of Insurance:

The Contractor shall furnish the Owner with certificates showing the type, amount, class of operations covered, effective dates and date of expiration of policies. Such certificates shall also contain substantially the following statement: "The insurance covered by this certificate shall not be canceled or reduced, except after thirty (30) days written notice has been received by the Owner."

(g) City of Marlborough as Additional Insured and Certificate Holder

The Contractor shall have the "City of Marlborough" named as an additional insured for this project on the policy, which shall be evidenced by the Certificate submitted to the Owner. The Certificate holder shall read exactly as follows: "City of Marlborough c/o Department of Public Works, Engineering Division, 135 Neil Street, Marlborough, MA 01752."

29. <u>Contract Security, Performance and Payment Bonds</u>

29.1 The Contractor shall furnish to the Owner, at the time of its execution of the Contract, a Performance Bond in an amount at least equal to one hundred percent (100 %) of the total contract price as security for the faithful performance of this Contract. Such bonds shall be in a form, and with a surety company approved by the Owner and authorized to do business in the Commonwealth of Massachusetts.

29.2 The Contractor shall furnish to the Owner, at the time of its execution of the Contract, a Payment Bond in an amount not less than one hundred percent (100 %) of the total contract price, as security for the payment of all persons performing labor on the project under this Contract, and furnishing materials in connection with this Contract. Such bond shall be in a form, and with a surety company approved by the Owner and authorized to do business in the Commonwealth of Massachusetts.

29.3 It is expressly understood and agreed that all sums retained or that may be retained by the City under any of the provisions of this Contract are solely for the benefit of the City and that the security required by MGL Ch. 149, sec. 29, as amended, is furnished exclusively by the bond accompanying the Contract.

29.4 Failure to meet the bond requirements of this section shall be cause to terminate the Contract.

30. Assignments

The Contractor shall not assign or subcontract the whole or any part of this Contract or any moneys due or to become due hereunder without the prior written consent of the Owner. If the Contractor assigns all or any part of any moneys due or to become due under this Contract, the instrument of assignment shall contain a clause substantially to the effect that the right of any assignee in and to any moneys due or to become due to the Contractor shall be subject to prior claims of all persons, firms and corporations for services rendered or materials supplied for the performance of the work required by this Contract.

31. Engineer's Authority

The Engineer will give all orders and directions contemplated under this Contract and specifications relative to the execution of the work. The Engineer shall determine the amount, quality, acceptability and fitness of the several kinds of work and materials which are to be paid for under this Contract and shall decide all questions which may arise in relation to said work and the construction thereof. The Engineer's estimates and decisions shall be final and conclusive, except as herein otherwise expressly provided. If any dispute arises between the parties hereto relative to said Contract and/or specifications, the determination of the Engineer shall be a condition precedent to the right of the Contractor to receive any money or payment for work related to said dispute. The Engineer will decide the meaning and intent of any portion of the specifications and of any plans or drawings.

32. Use of Premises, Removal of Debris, Sanitary Conditions

The Contractor, at its own expense, shall: (1) take every precaution against injuries or damage to property; (2) store its apparatus, materials, supplies and equipment in such orderly fashion at the site as to not unduly interfere with the progress of its work or the work of other contractors; (3) place upon the work or any part thereof only such loads as are consistent with the safety of that portion of the work; (4) clean up frequently all refuse, rubbish, scrap materials and debris caused by its operations; (5) before final payment, remove all surplus material, falsework, temporary structures, including foundations thereof, plant of any description and debris of any nature resulting from its operations, and to put the site in neat, orderly condition; (6) effect all cutting, fitting or patching of its work required for conformance with the specifications and, except with consent of the Engineer, not cut or otherwise alter the work of any other contractor; and (7) maintain in a neat, sanitary condition such toilet accommodations for the use of its

employees as may be necessary to comply with the State and local Boards of Health, or other bodies having jurisdiction over same.

The Contractor shall remove debris from the site of the work and legally dispose of it at any private or public dump or other facility that the Contractor may choose. The Contractor shall make all arrangements and obtain any approvals necessary for said disposal from the owners or officials in charge of such dumps.

No open fire shall be permitted on site.

Chemical Waste: Chemical waste shall be stored in corrosion resistant containers, removed from the Project site, and disposed of not less frequently than monthly unless directed otherwise. Disposal of chemical waste shall be in accordance with requirements of the U.S. Environmental Protection Agency (EPA) and the Massachusetts Department of Environmental Protection (DEP). Fueling and lubricating of vehicles and equipment shall be conducted in a manner that affords the maximum protection against spills and evaporation. Lubricants to be discarded or burned shall be disposed of in accordance with approved procedures meeting all applicable Federal, State and local regulations. In the event of an oil or hazardous materials spill large enough to violate Federal, State, or applicable local regulations, the Engineer shall be notified immediately. The Contractor shall be responsible for immediately cleaning up any oil or hazardous waste spills resulting from its operations. Any costs incurred in cleaning up any such spills shall be borne by the Contractor.

33. Notice and Service Thereof

Any notice to either party from the other relating to this Agreement shall be in writing and posted, by certified mail, return receipt requested, to the party at the address noted below:

City

Department of Public Works
City of Marlborough
135 Neil Street
Marlborough, MA 01752

Contractor

34. Other Prohibited Interests

No official of the Owner who is authorized in such capacity and on behalf of the Owner to negotiate, make, accept or approve, or to take part in negotiating, making, accepting or approving any architectural, engineering, inspection, construction or material supply contract or any subcontract in connection with the construction of the project, shall become directly or indirectly interested personally in this Contract or in any part hereof. No officer, employee, architect, attorney, engineer or inspector of or for the Owner who is authorized in such capacity and on behalf of the Owner to exercise any legislative, executive, supervisory or other similar functions in connection with the construction of the project, shall become directly or indirectly

interested personally in this Contract or in any part thereof, any material supply contract, subcontract, insurance contract or any other contract pertaining to the project.

35. Suspension of Work

If the Owner is prevented or enjoined from proceeding with work either before or after the start of construction by reason of any litigation or other reason beyond the control of the Owner, the Contractor shall not be entitled to make or assert claim for damage by reason of said delay; but time for completion of the work shall be extended to such reasonable time as the Owner may determine will compensate for time lost by such delay with such determination to be set forth in writing. If the reason for said delay was not beyond the control of the Contractor, the Contractor shall have no right to damages, as set forth herein, or to an extension of time. Notwithstanding any provision to the contrary, the requirements of MGL c. 30, §39O are hereby incorporated and made a part of this Agreement.

36. Access to Records

The Contractor shall maintain accounts and records, including personnel, property and financial records, adequate to identify and account for all costs pertaining to the Contract and such other records as may be deemed necessary by the Owner to ensure proper accounting for all project funds. These records shall be made available for audit purposes to the Owner or any authorized representative, and shall be retained for seven years.

37. Age Discrimination Act of 1975 (for contracts over $2,000)

No person in the United States shall, on the basis of age, be excluded from participation in, be denied the benefits of, or be subjected to discrimination from receiving Federal financial assistance. The Contractor shall comply with the provisions of the Age Discrimination Act of 1975 (42 U.S.C. 6101 et seq.), prohibiting age discrimination in employment.

38. Non-Discrimination

The City of Marlborough is an Equal Opportunity Employer. The Contractor shall not discriminate against any employee or applicant for employment because of race, age, color, religious creed, gender, handicap, sexual orientation, veteran's status or national origin. The Contractor shall take affirmative action to ensure that applicants for employment and employees are treated without regard to their race, age, color, religious creed, gender, handicap, sexual orientation, veteran's status or national origin. Such action shall include, but not be limited to, the following: employment, upgrading, demotion, or transfer; recruitment or recruitment advertising; layoff or termination; rates of pay or other forms of compensation; and selection for training, including apprenticeship. The Contractor shall post in conspicuous places, available to employees and applicants for employment, notices setting forth the provision of this non-discrimination clause. The Contractor shall state in all solicitations or advertisements for employees placed by or on behalf of the Contractor, that all qualified applicants shall receive

consideration for employment without regard to race, age, color, religious creed, gender, handicap, sexual orientation, veteran's status or national origin. The Contractor shall incorporate the foregoing requirements of this paragraph in all contracts for work to be performed in accordance with this Contract, and shall require all of its subcontractors to incorporate such requirements in all subcontracts for program work. The City may cancel, terminate or suspend the Contract in whole or in part for any violation of this paragraph.

Equal Employment Opportunity Requirements: The Contractor's EEO Certificate must be signed by the low general bidder and all file subbidders as a condition of Contract validation by the Owner. The Contractor shall provide weekly and quarterly information to the Owner on copies of forms that can be found in Appendix B. The Owner may suspend part of all of any payment due under this Contract until such time as the Contractor or any Subcontractor is able to demonstrate compliance with the terms of the Contract. The Owner may terminate or cancel part or all of the Contract, in accordance with the termination provisions of this Contract, unless the Contractor or Subcontractor is able to demonstrate, within a specified time, compliance with the terms of the Contract.

The Contractor shall send to each labor union or representative or workers with which they have a collective bargaining agreement or other contract or understanding, a notice advertising the said labor union or worker's representatives of the Contractor's commitment under this subsection and shall post copies of the notice in conspicuous places available to employees and applicants for employment.

In the event of noncompliance by the Contractor with the nondiscrimination clauses of this Agreement or with any such rules, regulations, or orders of the Secretary of Labor, the Contract may be canceled, terminated or suspended in whole or in part, and the Contractor may be declared ineligible for further Government contract or federally assisted construction contract procedures authorized in Executive Order 11246, or by rules, regulations, or orders of the Secretary of Labor, as otherwise provided by law.

39. Non Federal Labor-Standards Provisions

The Massachusetts Labor-Standards Provisions, including the provisions concerning maximum hours of work, minimum rates of pay, and overtime compensation, with respect to the categories and classifications of employees hereinafter mentioned are included in this Contract pursuant to the requirements of applicable State or local laws. The limitations, if any, in these Massachusetts Labor-Standards Provisions upon the hours per day, per week or per month which employees engaged on the work covered by this Contract may be required or permitted to work thereon shall not be exceeded.

40. Schedule of Salaries and Wages

The Contractor shall be responsible for complying with prevailing wage rates and health and welfare fund contributions applicable to this Contract as determined by the Commonwealth of Massachusetts, Department of Labor and Workforce Development, Division of Occupational

Safety (DOS), under the provisions of MGL, c. 149, §§ 26 - 27D. If the DOS has established a Schedule of prevailing wage rates to be paid to the operators of trucks, vehicles or equipment for this Project, the Contractor is obligated to pay operators at least the prevailing wage rate contained on the Schedule under the provisions of MGL c.149, §§26-27H, as amended. If drivers of bituminous concrete (asphalt) or ready-mix concrete (cement) are employed by the Contractor, they shall be paid the prevailing wage only while on-site at the public construction project. (Notice January 8, 2004 issued by the Department of Labor's Division of Occupational Safety)

The State prevailing wages, which are incorporated herein by reference, shall be paid under this contract and reported by the submission of certified weekly payrolls to the Owner. The Contractor is responsible for compliance of this paragraph by its subcontractors.

41. Labor Provisions

41.1 In the employment of mechanics and apprentices, teamsters, chauffeurs and laborers in the construction of public works in the Commonwealth by the Contractor and Subcontractors, preference shall first be given to citizens of the Commonwealth who have been residents of the Commonwealth for at least six months at the commencement of their employment, who are veterans as defined in clause forty-third of MGL c. 4, §. 7, as amended, and who are qualified to perform the work to which the employment relates; and secondly, to citizens of the Commonwealth generally who have been residents of the Commonwealth for at least six months at the commencement of their employment, and if they cannot be obtained in sufficient numbers, then to citizens of the United States, in accord with MGL c. 149, §26. Veterans' preference per MGL c.41, §112.

41.2 The minimum rates of wages to be paid mechanics and apprentices, chauffeurs, teamsters and laborers shall be set forth in the schedule of rates of wages determined by the Commissioner of Labor and Industry as required by MGL c.149, §§26-28, as amended, unless the Federal rates are higher.

41.3 In accordance with MGL c. 149, s 34A, the Contractor shall, before commencing performance of the contract, provide by insurance for the payment of employer's liability compensation and the furnishing of other benefits under M. G. L. c. 152 to all persons to be employed under the contract, and the Contractor shall continue such insurance in full force and effect during the term of the contract. Sufficient proof of compliance with this section must be furnished at the time of execution of this contract. Failure to provide and continue in force such insurance as aforesaid shall be deemed a material breach of the contract and shall operate as an immediate termination thereof. The attention of the Contractor is directed to that portion of G. L. c. 149, s. 34A which provides that whoever violates any of its provisions shall be punished by a fine of not more than one hundred dollars or by imprisonment for six months, or both; and, in addition, any Contractor who violates any provision of this section shall be prohibited from contracting, directly or indirectly, with the Commonwealth or any political subdivision thereof for the construction, alteration, demolition, maintenance or repair of, or addition to, any public

works or public building for a period of two years from the date of conviction of said violation.

41.4 The Contractor shall pay to any reserve police officer employed by it the prevailing rate of wage paid to regular police officers, as required by MGL c. 149, s. 34B.

41.5 The Contractor shall provide the Owner with copies of each current permanent OSHA card or temporary OSHA certificate for each employee working on this project with the initial payment request; along with each journeyman's or apprentice certificate for each employee claiming this work category.

41.6 **N**o laborer, workman, mechanic, foreman or inspector working within the Commonwealth of Massachusetts in the employment of the Contractor, Subcontractor or other person doing or contracting to do the whole or part of the Work, shall be required or permitted to work any more than eight hours in any one day, or more than 48 hours in any one week, or more than six days in any one week in full compliance with provisions of **M.G.L. c.149 §34**, as amended, except in cases of emergency.

Every employee on the Work shall lodge, board, and trade where and with whom he/she elects, and the Contractor and any Subcontractor nor his agents or employees shall not directly or indirectly require, as a condition of employment, that an employee lodge, board, or trade at a particular place or with a particular person.

42. Environmental Requirements

The Contractor shall comply, where applicable, with: Protection of Wetlands Laws.

43. "Right To Know" Law

If the Contractor uses or stores toxic or hazardous substances it is subject to MGL c. 111F, §2, the Right to Know Law and regulations promulgated by the Department of Public Heath, 105 CMR 670, the Department of Environmental Protection, 310 CMR 33, and the Department of Labor and Workforce Development, 441 CMR 21, and must post a Workplace Notice obtainable from the Department of Labor and Workforce Development.

As per requirements established by the United States Department of Labor Occupational Safety and Health Administration and in compliance with MGL c. 111F, Right to Know Law, it is required that all Material Safety Data Sheets accompany each initial product shipment where applicable, as well as a copy sent to the Grants Administrator, which will be forwarded to the Right-To-Know Coordinator for the City of Marlborough.

44. Archaeological and Historic Preservation

All items having any apparent historical or archaeological interest which are discovered in the course of any construction activities shall be carefully preserved and reported immediately to the Engineer for determination of appropriate actions to be taken.

The Contractor shall, in the performance of environmental assessments under the National Policy Act, and the Massachusetts Environmental Policy Act, comply with section 106 of the National Historic Preservation Act of 1966 (16 U.S.C. 470), federal Executive Order 11593, and the Preservation of Archaeological and Historic Data Act of 1966 (17 U.S. C. 469 a-1 et seq.), by (a) consulting with the State Historic Preservation Officer to identify properties listed in or eligible for inclusion in the National Register of Historic Places that are subject to adverse effects (see 36 CFR Part 800.8) by the proposed activity.

45. Interest of Contractor and Employees

The Contractor covenants that it presently has no interest and shall not acquire any interest, direct or indirect, in the study area or any parcels therein or any other interest which would conflict in any manner or degree with the performance of its services hereunder. The Contractor further covenants that in the performance of this contract, no person having any such interest shall be employed.

46. Statement of Management, CPA Statement MGL c.30, §39R (for contracts in excess of $100,000)

For contracts in excess of $100,000 the Contractor, prior to execution of the Contract, shall file a statement of management with the Owner assuring that its system of auditing controls ensures management accountability and protection of assets as required by MGL c. 30, sec. 39R(c).

For such contracts, the Contractor shall file with a Owner, prior to execution of the Contract, a signed statement from a Certified Public Accountant that said CPA has examined the Statement of Management and opines whether the representations of management are consistent with its system of controls and its financial statements as set forth in MGL c. 30, § 39R(c).

The Contractor awarded a contract shall annually file with the Owner during the term of the Contract, a financial statement prepared by an independent certified public accountant on the basis of an audit by such accountant. The final statement filed shall include the date of final payment. All statements shall be accompanied by an accountant's report.

47. Severability

If any provision of this Agreement is held invalid, the remainder of the Agreement shall not be affected thereby, and all other parts of this Agreement shall nevertheless be in full force and effect.

48. Confidentiality

The Contractor shall protect the privacy of, and respect the confidentiality of information provided by, program participants, consistent with applicable federal and state regulations, and further shall comply with MGL c. 66, sec. 10, regarding access to public records.

49. Executive Orders

The Contractor shall comply with the provisions of M.G.L. c.151B; Executive Order 478 regarding Nondiscrimination, Diversity, Equal Opportunity and Affirmative Action; Executive Order No. 390 pertaining to minority and women owned business development; Executive Order 481, prohibiting the use of undocumented workers on state contracts (including state-assisted funded contracts); and all regulations promulgated pursuant thereto. The aforementioned law, executive orders, and regulations are incorporated herein by reference and made a part of this Contract as applicable.

50. Compliance with Chapter 370 Acts of 1963

The contractor shall furnish all notices and shall do all work and be responsible for all requirements of Chapter 370 of the Acts of 1963, entitled "An Act Requiring a Contractor Making An Excavation In A Public Way to Give Notice Thereof to Public Utility Companies."

No person shall dig up or make an excavation in a public way for the laying, altering or repairing of a drain water or sewer without obtaining a written permit from the Department of Public Works, Engineer Division City. Notwithstanding any contrary provision of any local ordinance or by-law, no such permit shall, except in case of an emergency, be approved or issued by said division until copies of the notices to public utility companies required by section forty of chapter eighty-two have been filed with said board or officer by the applicant for such permit. Whoever violates any provision of this section shall be punished by a fine of not more than fifty dollars for the first offense and not less than fifty dollars nor more than one hundred dollars for any subsequent offense.

51. Foreign Corporations

Contractors and subcontractors incorporated outside of Massachusetts shall comply with MGL c. 30, sec. 39L and other applicable laws.

52. Applicable Law

This Agreement shall be construed under the laws of the Commonwealth of Massachusetts. The laws of the Commonwealth of Massachusetts ("Commonwealth") shall govern all rights and duties under this Agreement, including without limitation the validity of this Agreement. Any actions arising out of this Agreement shall be brought and maintained in a State or Federal Court in Massachusetts which shall have exclusive jurisdiction thereof. The City may agree to voluntary mediation or arbitration of any contract dispute and will share the costs of such mediation or arbitration. No legal or equitable rights of the parties shall be limited by this paragraph.

53. Asbestos

If this Project requires the containment or removal of asbestos or material containing asbestos, lead or waste containing lead base paint, the Contractor shall ensure that the person or company performing the asbestos or lead related services is licensed pursuant to applicable State laws and regulations.

54. As-Built Plans

The Contractor shall furnish electronic and hard copy "As-Built" plans of the completed Project to the Engineer prior to final acceptance of the Project by the City. To begin this process, the City will supply to the contractor a set of electronic CAD files of the Contract Drawings in a blank as-built format. These drawings will contain all relevant information regarding all approved conditions of the job. They will not, however, contain any horizontal or vertical information for any water, drainage, sewerage or other utilities installed, elevations, design, etc. Any element of the site modified and/or adjusted as part of this project must be noted and the as-built information supplied on the drawings. Ample space and parenthetical blanks will be present for this information. The contractor's engineer shall also locate the curb line, edge of pavement, retaining walls and show and/or label the center line elevations on the as-built drawings.

When the electronic plans supplied to the contractor by the City of Marlborough have been filled in with all appropriate as-built information, the contractor shall submit a set of **preliminary** plans for review by the City. The plans supplied by the contractor or his engineer to the City contain the as-built data as described above. All as-built information supplied by the contractor shall be in **RED** ink and ***ITALICIZED*** so as to signify that it is the final information. There shall also be an indication of this in the legend and a brief explanation. This first set of as-built plans does not have to be certified by an engineer or contain the required signatures. These are for our review only. After review, the City of Marlborough will notify the contractor of any changes or corrections that need to be made. Upon approval, the set of plans will be returned to the Contractor. The contractor will then acquire the necessary certifications and signatures for final submission of the final as-built drawings produced on Mylar.

The contractors engineer shall also provide the following certifications as part of his as-built drawings submittal:

1. I hereby certify that the information shown on this/these plan(s) accurately depicts field conditions based on an as-built survey by (*name of as-built surveyor*) performed on (*date of as-built survey*)
2. I hereby certify that the as-built information shown on this plan is in conformance with the approved site plans dated (date of contract plan).
3. I hereby certify that all sidewalks, handicap wheelchair ramps and driveway aprons conform to the latest standards and requirements of the Massachusetts Access Board, American Disability Act and the Architectural Access Board.

Electronic As-built Drawing Set

The contractor shall also provide this office with a complete electronic as-built drawing set. All as-built files must be compatible with the current version of AutoCAD the City uses and accepts. Check with the City of Marlborough Engineering Department for the latest version accepted. The as-built electronic plans will use the digital base map information provided by the City of Marlborough as the base for all additional information. The City of Marlborough's base maps are tied to the North American Datum of 1983 (NAD83) and the North American Vertical Datum of 1988 (NAVD88). All features shall be further stored in the Massachusetts State Plane Coordinate System. This will allow integration into the City's Geographic Information System.

The electronic as-built drawing set shall conform to the minimum standards specified in this section. All as-built drawing information shall accurately represent as-built construction and shall be graphically and mathematically correct, i.e. drawing objects shall represent changes in dimensioning during construction. There should be complete consistency between final electronic and hard copy information. The electronic files should allow the City of Marlborough to reproduce hard copies if needed.

Plan and Profile:

1. All as-built information shall be placed on its own layer entitled "AS_BUILT_INFO"

2. Include and attach all detail information generated by automated design software that describe any infrastructure components.

3. Non-referenced images, standard drawings, specifications, and/or blocks shall be bound in the drawing and not attached as an external reference.

4. If registered orthophotography is used as a backdrop, the image and registration file along with directory information, shall be provided.

5. Transportation plans for Signal or Detection systems, Street Lighting, or Roadway Striping/Signing shall each be submitted in individual AutoCAD drawing files.

Plot Layout/Plot Settings:

1. Submit all information required to reproduce a hard copy from the submitted electronic file.

2. Standard pre-installed AutoCAD font and line types shall be used.

Referenced Information

1. If X-refs are used with a drawing, bind all X-refs before submission. The City will not accept drawing with X-refs.

2. Purge all invisible drawing objects before submission.

Drawing Objects (Entities)

1. All as-built infrastructure components shall be conform to the City's layering convention as stated above.

2. Purge all drawings of empty layers and unused blocks, line types, dimension styles, plot styles, text styles, shapes, etc., and make sure all infrastructure components are clean, that is:

1. Ends of arcs, lines and p-lines are snapped end-point to end-point.
2. Remove duplicate objects.
3. Features representing areas (detention ponds, etc.) are composed of closed p-lines are at a minimum a series of valid objects snapped end-to-end with no gaps.

3. All drawing objects required for updating City inventories shall be easily assessable for extraction.

4. All infrastructure components shall be composed of the following valid object types in order to be accepted by the City:

1. Arc.
2. Circle.
3. Dimension.
4. Ellipse (including elliptical arcs).
5. Image.
6. Insert (also known as a Block Reference).
7. Leader.
8. Line.
9. Multiline Text.
10. Point.
11. Polyline.
12. Text.

Ownership:

All electronic files and hard copy maps submitted to the City of Marlborough upon completion of the project will become the sole property of the City of Marlborough. The City gains the right to ownership of all content for any future use. Electronic files will be submitted with full editing privileges allowing any future edits to be made by the City of Marlborough at a later date.

55. Miscellaneous

55.1 Firewood

The Contractor should anticipate that some property owners will wish to obtain a limited amount of firewood from tree removal operations under the Contract. Said property owners shall be given the opportunity to remove said firewood within a reasonable time. If, in the opinion of the Engineer, the wood is not removed within a reasonable time, the Contractor shall be responsible for removing it from the project.

55.2 Blasting

When the use of explosives is necessary for the execution of the work, the Contractor shall take the utmost care not to endanger life and property. Whenever directed, the number and size of the charge shall be reduced. The method of storage and handling of explosive and highly flammable materials shall conform with all state laws and regulations, as well as local requirements.

The Contractor is responsible for establishing pre-construction/blasting conditions which will include a pre-blast survey of all structures within 500 feet of the project limits. Care shall be taken to prevent injury to existing pipes or other structures and property above or below ground. Any damage caused as a result of the Contractor's work shall be the Contractor's responsibility.

Blasting operations are subject to the approval of the City of Marlborough Fire Chief. Explosive materials shall not be stored overnight, on site per the Marlborough Fire Department.

The successful Contractor must provide blasting details at all sites where blasting is to occur. The details are to be staffed by firefighters. No direct payment shall be made by the City to the Contractor for said details, the cost of which shall be included in the appropriate items unless otherwise provided for in the Contract. The Contractor must schedule the detail the day before the blasting operation. The permitting will be in accordance with 527 CMR 13.00, Massachusetts Fire Safety Code.

55.3 Work To Be Done By Others

The NSTAR Service Company, Massachusetts Electric, Verizon, and Com Cast/AT&T Broadband will, at their own expense, relocate their respective utilities as required.
The above work is expected to be carried out at the same time and in cooperation with the Contractor. No additional compensations will be allowed for any delay or inconvenience caused by these operations or other operations for adjustment, relocation, connection, alteration, to existing or installation of new structure, poles, underground cables and pipes.

55.4 Notice To Utilities

Written notice shall be given by the Contractor to all public service corporations or officials owning of having charge of publicly or privately owned utilities of its intentions to commence operations affecting such utilities as least one week in advance of the commencement of such operations. The Contractor shall file a copy of such notice with the Engineer.

The Utility Companies and persons involved are as follows:

NSTAR Service Company
157 Cordaville Road
Southborough, MA 01772
Francesco Giampa, Supervisor of Planning & Scheduling (508) 305-6866

Verizon
146 Leland Street
Framingham, MA 01702
Ellen Cummings, Regional Director (508) 820-3557

National Grid
245 South Main Street
Hopedale, MA 01747
Robert W. Russell,
Community & Customer Management (508) 482-1283

ComCast/AT&T Broadband
4 Lybetry Way
Westford, MA 01886
Comcast Operations Center (800) 556-9979

Department of Public Works
Municipal Garage – 135 Neil Street
Marlborough, MA 01752
Ronald M. LaFreniere, P.E., Commissioner of Public Works
(508) 624-6910
ext. 7200

Marlborough Conservation Commission
Priscilla Ryder, Conservation Officer, (508) 460-3781

Marlborough Fire Alarm
Central Fire Station
Marlborough, MA 01752
Marlborough Fire Department (508) 485-2323

Marlborough Police Department
Marlborough, MA 01752 (508) 485-1212

North Reading Transportation
4 Municipal Drive
Hudson, MA 01749
School Bus Company (978) 562-5186

First Student Incorporated

208 Hayes Memorial Drive
Marlborough, MA 01752
School Bus Company (508) 485-3194

"DIG SAFE" Call Center 1-888-344-7233

The Contractor's attention is directed to Ch. 502 of the Acts of 1980 as they apply to excavations in general. The Contractor shall be responsible for complying with all aspects of this regulation prior to proceeding with any excavation.
The Contractor must comply with Dig-Safe Laws. Dig-Safe is the Utility Underground Plant Damage Prevention System, 331 Montvale Ave., Woburn, MA 01801, 1.888.344.7233. The Contractor must notify Dig-Safe of contemplated excavation, demolition, or explosive work in public or private ways, and in any utility company right of way or easement, by certified mail, with a copy to Department of Environmental Protection (DEP). This notice must be given at least seventy-two (72) hours prior to the work, but not more than sixty (60) days before the work is to be done. Such notice shall state the name of the street or the route number of the way and an accurate description of the location and nature of the proposed work. Dig-Safe is required to respond to the notice within seventy-two (72) hours of receipt by designating the location of pipes, mains, wires or conduits at the site. The Contractor shall not commence work until Dig-Safe has responded. The work shall be performed in such manner and with reasonable precautions taken to avoid damage to utilities under the surface at the work location. The Contractor shall provide the Superintendent with current Dig-Safe regulations, and a copy of **M.G.L. c.82 §40**. Any costs related to the services performed by Dig-Safe shall be borne by the Contractor.

The Contractor is advised to verify the locations of existing overhead and subsurface utilities in the vicinity of this project with the local utility companies.
Before the Contractor begins any work or operation which might damage any subsurface structures, he shall carefully locate all such structures and conduct his operations so as to avoid any damage to them. If the Contractor wishes to have any utilities temporarily relocated for his own convenience, he shall make the necessary arrangements with the utility company and reimburse them at his own expense for the cost of the work.

The Contractor shall dig test pits at the direction of the Engineer at the contract price.

55.5 MassDOT Standards

All Specifications and all Special Conditions contained in the bid/contract documents are to be used in conjunction with, and in addition to, the 1988 Commonwealth of Massachusetts, Department of Public Works, Standard Specifications for Highways and Bridges (current). In all cases, the more stringent Specifications and Special Conditions will apply. The drawings in the Commonwealth of Massachusetts Department of Public Works Construction Standards, 1977 Standards are hereby incorporated by reference.

Additional drawings or directions showing details in accordance with which work is to be done will be furnished from time to time by the Engineer, if found necessary.

The Contractor shall furnish all labor, services, materials, equipment, plant, machinery, apparatus, tools, supplies and all other things necessary to do all work required for the completion of each item of the work and as herein specified. The work to be done and paid for under any item shall include all incidental work necessary or customarily done for the completion of a first class job for that item.

The Contractor shall be responsible for establishing a reproducible construction baseline prior to construction and setting and maintaining line and grade for the duration of the project. All work carried out for line, grade and quality control shall be under the direct supervision of a Registered Professional Engineer (referred to as the Contractor's Engineer) being licensed to practice in the Commonwealth of Massachusetts.

55.6 Local Licensing Requirements

The successful bidder on this project will be required to secure all permits and licenses necessary for the proper execution and completion of the work. The standard licensing fees owed to the City of Marlborough shall be waived for the purposes of this contract; however, all other licensing requirements shall be met and the Contractor shall thoroughly familiarize himself with the standard licensing requirements of the City of Marlborough. The General Contractor is responsible for arranging inspections as required pursuant to applicable laws, rules, regulations and ordinances.

55.7 Hours of Work

The hours of work shall be between 7:00 A.M. and 3:30 P.M., Monday through Friday. There will be no work authorized beyond these limits unless expressly approved and authorized by the City or unless otherwise provided in the Contract.

55.8 Owner's Right to Perform Construction and to Award Separate Contracts

The Owner reserves the right to perform construction or operations related to the Project with the Owner's own forces, and to award separate contracts in connection with other portions of the Project or other construction or operations on the site. If the Contractor claims that delay or additional cost is involved because of such action by the Owner, the Contractor shall make such claim as provided elsewhere in the Contract Documents.

The Owner shall provide for coordination of the activities of the Owner's own forces and of each separate contractor with the Work of the Contractor, who shall cooperate with them. The Contractor shall participate with other separate contractors and the Owner in reviewing and coordinating their construction schedules with one another when directed to do so.

55.9 Authority Of The Owner

The City Engineer or his designee/Engineer shall be the sole judge of the intent and meaning of the Contract and his decision thereon and his interpretation thereof, shall be final, conclusive and binding on all parties. The City Engineer shall be the City's representative during the life of the Contract as directed, instructed, determined or decided by said City Engineer.

Approval of the Subcontractor(s) by the City Engineer is necessary before the start of work by said Subcontractor.

SPECIAL CONDITIONS

Reconstruction of Houde Street and Appurtenant Work

The subject road is primarily located within a residential neighborhood. Every attempt will be made to minimize disruption to residents during construction. Access for residents, school bus traffic, emergency response vehicles, solid waste & recycling vehicles shall be maintained. Adherence to hours of work (Monday thru Friday 7:00 AM to 3:30 PM) is anticipated.

Houde Street is to be reconstructed in its entirety. The contractor will be required to reclaim the existing pavement and gravel base to produce a 12" reclaimed gravel base. The roadway section is approximately 1655 feet in length and currently 36 feet to 38 feet in width. The proposed pavement width will be a consistent 38 feet in width. All subsurface work will be taken place within the City of Marlborough's Right-of Way and prior to the reclamation process. This work will include drainage improvements, replacement of plastic water services, replacement of hot mix asphalt sidewalks and curbing.

The road will be graded and compacted to the lines and thicknesses as indicated in the contract documents. Excess reclaimed material not utilized on the reconstruction project shall be removed from the site and disposed of as directed/approved by the Engineer. This excavation shall be included in the contract unit price for item 403.0, Reclaimed Base. Careful attention is to be paid while grading work is accomplished to ensure positive drainage to the catch basins. Silt sacks are to be installed in catch basins prior to construction to prevent the introduction of sediment into the City's drainage system.

After the binder course of pavement has been placed, any excavation within the paved surface with the exception of setting granite curbing *(if applicable)* and/or structure adjustment will be backfilled using control density fill (excavatable flowable fill). Prior to the placement of hot mix asphalt (top course), the contractor will demonstrate in a manner satisfactory to the Engineer that positive drainage is established.

In general, the existing roadway profile is to be reconstructed with a 3/8" per foot centerline crown. However, during construction modifications may be directed by the Engineer. It may be necessary to remove some sub-grade material to achieve proposed grade. To that end, the reclaimed base course will be windrowed to one side, sub-grade excavated to the depth necessary, and the reclaimed material placed back over the sub-grade. This excavation shall be included in the contract unit price for item 403.0, Reclaimed Base. The contractor shall be responsible for maintaining a 6-inch curb reveal from the hot mix asphalt top course. The stockpiled reclaimed material, if it meets the gradation requirements for Gravel Borrow – Type C, shall be used for sidewalk gravel. Payment for stockpiling, spreading, fine grading and compaction shall be included in the contract unit price specified for item 170. Both gradation and compaction tests (50 foot intervals as specified by the engineer, 97% compaction required) and all other areas shall be included in the price specified for item 403, Reclaimed Base Course. Both gradation and compaction tests shall be performed at least 24 hours prior to the binder course of pavement being placed.

All work shall consist of furnishing all labor, materials, tools, equipment for removal/disposal of drain line(s), structures, replacement, dewatering, proving, flushing, and connection to all proposed and existing structures. All precast manholes/catch basins shall be cored in the field and/or precast cut outs for proper connection. The work shall also include any/all temporary plating, bedding, excavation support backfilling compaction and restoring the excavation trench area with pavement back to finish grade as shown on the design plans/details

The Contractors attention is directed to the regulations of the Commonwealth of Massachusetts Architectural Access Board. As to the construction of sidewalks, wheelchair ramps and other improvements shall conform to these regulations. Existing sidewalks adjacent to the roadway (that are scheduled to be reconstructed) shall be done in accordance with same. Prior to placement of the top course of bituminous concrete sidewalk and/or once the forms have been set for the cement concrete sidewalks (whichever is applicable), the contractor is to notify the Engineer and provide to him any survey work necessary to demonstrate that the sidewalk when completed will be in conformance with the regulations of the Architectural Access Board, American Disability Act and the Massachusetts Highway Department.

GENERAL CONTRACTOR'S GUARANTEE FORM

(To be submitted in Duplicate after Completion of Contract Work)

Building: _____ Location: _____

Project No. _____ Date: _____

To: City of Marlborough

We (I) hereby guarantee all materials and workmanship, executed under the Agreement between the City of Marlborough and _____ dated
(General Contractor)
_____.
for the construction of and change orders thereto, including revisions to Drawings and modifications to Specifications for a period of one (1) year from date of substantial completion, except for the following work which is guaranteed for the time indicated for the date of substantial completion as hereinafter noted:

(Work)	(Subcontractor)	(Guarantee Period YEARS)
(Work)	(Subcontractor)	(Guarantee Period YEARS)
(Work)	(Subcontractor)	(Guarantee Period YEARS)

The guarantee is for all work whether executed by our own or our Subcontractor's forces. Copies of all required guarantees executed by our various Subcontractors are attached.

We agree to correct or have correct, without cost to the City, any imperfect materials or equipment whether or not partially or completely covered by manufacturer's guarantee, or which were not installed in accordance with the plans and specifications, at any time during the period of the guarantee. Any material or equipment which in the opinion of the Designer requires excessive service at any time during the first year of operation shall be considered defective and shall be replaced under this guarantee at no expense to the City. As to equipment or parts thereof which are replaced, the one (1) years guarantee, or longer, as per warranty and/or guarantee provisions, shall run from the approved date of substantial completion of the replaced equipment installation or parts thereof.

All items contained in the final punch list and corrected or replaced after the approved date of substantial completion shall extend the guarantee of those items to correspond to one year after their final completion.

All corrections to defective work will be done at the convenience of the City and will include all labor and material necessary to remove and replace any part of the building or its equipment installed under the Agreement noted above, where such removal may be necessary to complete the corrective work. We further agree to make, or have made, any corrections or adjustments to meet specified performance results.

Should the City, for its convenience, require the work to be done during other than regular working hours, the City shall pay all extra costs involved by such requirements.

It is understood that the City will give notice of observed defects with reasonable promptness and that all questions arising under this guarantee shall be decided by the Designer.

Approved date of substantial completion of the work: _____

Date of expiration of this guarantee: _____

SIGNED by General Contractor: _____ Title of Officer: _____

Specifications

The following subsections describe the measurement of and payment for the work to be done under specific items listed in the Proposal. If any item is not included herein, the provisions of the Massachusetts Department of Transportation Highway Division Standard Specifications shall apply. The unit price or lump sum price for various items of work as listed in the Proposal, under this Contract, shall prevail without any adjustment of quantity over and above that measured for payment or in price as may be allowed under the Massachusetts Department of Transportation Highway Division Standard Specifications Standard Specification.

Each unit or lump sum price stated in the Bid shall constitute full compensation as herein specified, for each item of work completed in accordance with the Drawings and Specifications including handling water and cleaning up all debris, excess materials and site restoration. The prices for those items which involved excavation shall include compensation for disposal of surplus material and installation of all necessary sheeting and bracing.

SUMMARY OF WORK

1.0 GENERAL

This section contains a summary of the work to be performed by the Contractor. The work described herein is an overview and details of such shall be contained in other Sections.

A. Under the price specified to be paid for each item, the Contractor shall furnish all labor, materials, equipment, and plant and perform all operations to complete all operations to complete all work as indicated and specified. All supervision, overhead items, bond and permit costs, protection and precautions and all other costs, incidental to the construction work, complete and as specified, are also included.
B. A complete, finished, working job, as intended by the general nature of these Specifications, shall be produced whether or not any particular wording or direction is omitted or inadvertently not clearly stated.
C. Measurement for payment shall be by the Engineer, except where noted elsewhere in this Specification. Measurement for payment for lump sum items shall be on the basis of percentage of work complete and in place.
D. The prices for those items which involve excavation shall include compensation for transportation and disposal of surplus excavated material and handling water.
E. Owner reserves the right to delete any item or modify estimated quantities without penalty. Contractor shall make no claim as to lost profits or added costs due to quantity adjustments or deletions.
F. Unit prices listed shall be the basis of cost adjustment for additional items of work required by a change order.

1.1 DESCRIPTION

In accordance with the bid/contract documents, the Contractor shall perform the task as outlined to produce a final product which is complete and in place and ready for operation. The Contractor shall provide and pay for all materials, labor, tools, equipment, water, light, heat, power, transportation, superintendence, temporary construction of every nature, taxes legally collectible because of the work, and all other services and facilities of every nature whatsoever necessary to perform the work to be done under the contract and deliver it complete in every respect with the specified time.

2.0 MATERIALS

No materials are specified in this Section. Materials shall be specified in these bid/contract documents.

3.0 CONSTRUCTION METHODS

No construction methods are specified in this Section. Construction methods shall be as specified in these bid/contract documents or as approved by the Engineer.

4.0 MEASUREMENT AND PAYMENT

No measurement and payment are specified for Contract items in this Section. Measurement and payment for the work performed under this Contract shall be as specified in these bid/contract documents.

SUBMITTALS

1.0 GENERAL

1.1 DESCRIPTION:

This section specifies the types of submittals required throughout the project. The Contractor shall submit the following information in the manner described herein.

1.2 SHOP DRAWINGS:

Shop Drawings shall be submitted by the Contractor to the Engineer for all products specified within these bid/contract documents and indicated or implied on the drawings. The Shop Drawings shall be submitted at least ten (10) days prior to scheduled use of the product for review by the Engineer.

Each Shop Drawing shall include the specifications of the product, material content, physical and chemical parameters, testing results, dimensions, qualifications, color choices, samples (if specifically required), and drawings (if specifically required).

Exactly four (4) copies of Shop Drawing shall be submitted to the Engineer or designated representative. The submitted Shop Drawings shall be stamped and signed by the Contractor with a statement indicating that the Contractor has reviewed the Shop Drawings and accepted the product. Upon receipt of the Shop Drawings, the Engineer will review the product information to determine acceptability based on the Contract Documents. The Engineer shall return at least two (2) copies of the reviewed Shop Drawings to the Contractor with a memo detailing the Engineer's review. In the case that the Shop Drawing is rejected, the Engineer will return three (3) copies to the Contractor with a reasonable explanation as to why the product was rejected. The following comments shall be used to summarize the Engineer's review:

Approved – the Shop Drawing is accepted as submitted with no exceptions

Approved as Noted – the Shop Drawing is accepted as submitted under the condition that the noted corrections will be made as indicated

Revise and Resubmit – the Shop Drawing is rejected as submitted but may be revised and resubmitted for review

Rejected – the Shop Drawing is rejected as submitted; the product list is not acceptable.

The Engineer reserves the right to reject a product which is not in conformance with these bid/contract documents or is not of the required quality to maintain the specified product requirements for a reasonable length of time. Any material or equipment installed before it is approved shall be removed and replaced by the Contractor with material or equipment acceptable to the Engineer at no additional cost to the City.

1.3 PROGRESS REPORTS:

The Contractor shall submit progress reports on a weekly basis to the Engineer. Summarize the events of the previous week, list materials and labor expended, daily quantities for the week, progress of work, problems encountered, significant site visitors, and predicted construction events for the upcoming week.

1.4 SCHEDULE:

The Contractor shall submit a comprehensive construction schedule to the Engineer for review due upon issuance of the Notice to Proceed at least ten (10) days prior to the start of work. The construction schedule shall demonstrate in detail the means by which the Contractor will perform the work specified herein in the time allotment stated in the Contract. The Contractor shall not begin any work until the Engineer has reviewed and approved the submitted construction schedule.

The construction schedule shall contain all significant tasks with anticipated start date and end date. The schedule shall identify landmark tasks, critical tasks, dependent tasks and duration for each task in days.

The Contractor shall submit an updated schedule each week with the progress report. The updated schedule shall include all information described above. If the contractor fails to provide an updated completion schedule with his progress report no further payments will be made by the City of Marlborough until such time as a revised scheduled and report is submitted and approved by the City Engineer and/or his designee. If the updated schedule indicates that a delay is anticipated in the final end date, the Contractor shall submit to the Engineer a written reason for the delay, possible remedy, and justification for the new end date. The Engineer shall review the statement to determine if the Contractor is responsible for the delay. If the Contractor is found responsible, the Contractor shall be fined in accordance with the General Conditions.

If the Contractor is deemed not responsible, the contract duration will be extended in accordance with the General Conditions.

1.5 CERTIFIED PAYROLLS:

The Contractor shall submit to the City weekly certified payrolls no later than two weeks following the week of work performed. These payrolls shall be certified by the Contractor's payroll clerk. Minority work hours to date shall be provided with the payroll and pay estimates.

2.0 MATERIALS

No materials are specified in this Section.

3.0 CONSTRUCTION METHODS

No construction methods are specified in this Section.

4.0 MEASUREMENT AND PAYMENT

No measurement and payment is specified in this Section.

CONTROL OF WORK

1.0 GENERAL

1.1 DESCRIPTION:

This section specifies the actions which shall be taken to control the work performed under this Contract.

1.2 RELATED SECTIONS

Attention is directed to the General Conditions, Special Conditions and Contract Drawings.

2.0 MATERIALS

2.1 CALCIUM CHLORIDE:

Calcium chloride shall be used to control dust as necessary or as required by the Engineer. The chemical shall be pure and free from deleterious materials and contamination. The calcium chloride may be in liquid or flake form.

2.2 CLEANING MATERIALS:

Only cleaning materials recommended by manufacturer of surface to be cleaned shall be used.

Cleaning materials shall be used only on surfaces recommended by cleaning material manufacturer.

3.0 CONSTRUCTION METHODS

3.1 CONTROL:

The Contractor shall give his personal attention constantly to the faithful prosecution of the work and shall keep the same under his personal control. He shall not assign by power of attorney or otherwise, or sublet the work or any part thereof without the written consent of the Contracting Officer. The Contractor shall designate a Project Manager for the project. The Project Manager shall be at the site at all times when construction is taking place including work by subcontractors.

3.2 ADVERTISEMENTS:

No advertisements or company signs shall be displayed within the area of the work.

3.3 DUST CONTROL:

A systematic method of Dust Control shall be maintained by the Contractor, using water and/or calcium chloride as directed by the Engineer, in accordance with Section 440 of the 1988 edition (or latest revision) of the Commonwealth of Massachusetts Department of Public Works Standard Specification for Highways and Bridges, as amended or as otherwise approved by the Engineer.

3.4 TRAFFIC CONTROL:

Traffic control, traffic patterns and/or traffic flow will be governed by the City Engineer. Consideration will be given to all parties in making final determinations.

All temporary barriers, traffic control signs and warning beacons will be provided and maintained by the Contractor, and will be paid under the appropriate line item. The number of barriers, signs, variable message boards and beacons and their respective location will be determined by the City Engineer.

Emergency vehicles, school buses and residents adjacent to the work area shall be guaranteed access through the work area at all times, unless otherwise directed by the Engineer. No additional compensation will be allowed for maintaining said access.

The safe passage of pedestrian and vehicular traffic around the perimeter of the construction/ work area, within reasonable limits, shall be guaranteed at all times by the Contractor. Temporary pedestrian walkways may be required by the Engineer at no additional compensation to the Contractor.

3.5 POLLUTION CONTROL:

The Contractor shall maintain a clean and pollution free site at all times and under all conditions. Waste generated shall be contained on the site and removed on a daily basis. Storage of contaminated materials which have been found at the site and which could potentially contaminate soil and/or groundwater shall not be stored directly on the ground surface but shall be completely contained to the satisfaction of the Engineer. Such materials shall not remain on the site for extended periods of time.

Runoff from the construction site shall be controlled so as not to contaminate groundwater, surface water, soils or other environmental features.

All equipment used for construction, stored at the site, or on the site for any reason shall be free from leaks of oil or hazardous materials and shall not generate excessive exhaust or smoke to pollute the air.

The noise generated by the construction operations at the site shall not be in excess of what is necessary to complete the work described herein. Excess noise due to faulty equipment will not be permitted.

3.6 SAFETY:

It is the responsibility of the Contractor to maintain the project in accordance with the following safety standard: Industrial Bulletin No. 12. Rules and Regulations for the Prevention of Accidents in Construction Operations (effective April 19, 1967 or latest) as

published by the Massachusetts Department of Labor and Industries, Division of Industrial Safety.

All volatile waste shall be stored in covered metal containers approved by the Fire Department and shall be removed from the premises daily.

3.7 LIMITS OF WORK:

The Contractor shall keep all work within the limits of work as identified on the drawings and specified herein unless otherwise directed and approved by the City Engineer. Work outside the limits shall be controlled in accordance with this section and shall be restored to the conditions found prior to its disturbance.

4.0 MEASUREMENT AND PAYMENT

4.1 MEASUREMENT:

No measurement or payment shall be made for safety, traffic control, pollution control, or limits of work, which are all considered part of the Contractor's responsibility.

Measurement for dust control shall be made based upon the pounds of calcium chloride placed.

Silt sacks shall be measured on a per catch basin basis. No measurement shall be made for replacement of silt sacks.

4.3 PAYMENT:

Calcium Chloride for dust control shall be paid for at the contract unit price for Item 440. – Calcium Chloride for Roadway Dust Control.

Silt sacks for catch basin protection shall be paid for at the contract unit price for Item 697.1 – Silt Sack. No additional payment will be made for cleaning and replacing silt sacks.

4.3 PAYMENT ITEMS:

Item#	Item	Unit
440	Calcium Chloride	LB
697.1	Silt Sack	EA

MEETINGS

1.0 GENERAL

1.1 DESCRIPTION:

This section specifies the Contractor's responsibility with respect to kick-off meetings, construction progress meetings, close out meetings and other meetings related to the work contained in this Contract.

1.2 PRE-CONSTRUCTION MEETING:

The Contractor and all Subcontractors to perform work under this Contract shall attend a pre-construction meeting with the City, Engineer, and/or Designer. The meeting shall include a site visit and shall address start dates of construction, schedule, acceptable layout areas, and all issues regarding construction.

The pre-construction meeting shall be held no less than one week prior to start of any construction, delivery or storage of materials or equipment, or any work on the site.

1.3 PROGRESS MEETINGS:

During construction, progress meetings will be held weekly. The Contractor or his representative shall attend each progress meeting. The weekly progress report and schedule update shall be delivered to the City at least twenty-four (24) hours prior to each scheduled progress meeting. The purpose of the meetings is to review progress, address the concerns of the City, Design, and Contractor, and to review the schedule and related issues.

The weekly progress meeting shall be held at the site or at the City of Marlborough DPW at 135 Neil Street.

1.4 PROJECT CLOSE OUT MEETING:

At the end of construction and prior to the final payment to the Contractor, a project close out meeting shall be held. The Contractor shall attend this meeting. The purpose of the meting is to review the finished work with respect to the Contract, develop a punch list of outstanding work to be performed, address problems and concerns with the quality or completeness of work, and review original schedule and final end date.

2.0 MATERIALS

No materials are specified in this section.

3.0 CONSTRUCTION METHODS

No construction methods are specified in this section.

4.0 MEASUREMENT AND PAYMENT

No measurement and payment specified in this section.

TEMPORARY FACILITIES

1.0 GENERAL

1.1 DESCRIPTION:

The work to be performed in this Section consists of providing temporary facilities for the duration of the construction period including the periods of site preparation and clean up operations. Temporary facilities include field offices, temporary utilities, sanitary facilities, and water for construction, storage areas, and temporary drainage.

1.2 FIELD OFFICE:

The Contractor may, at his discretion, provide and maintain a field office, with telephone, at the job site. Field and/or temporary offices shall be removed when no longer contributory to the project. The Contractor shall pay for all costs in connection with the construction, servicing, maintenance and removal of temporary offices. City facilities, including telephone, will not be available for use by the Contractor.

Construction shanties, sheds and temporary facilities provided for above, or for the Contractor's convenience, shall be located and constructed as approved by the City Engineer and the Building Commissioner and shall be maintained in good condition and neat appearance, including painting with two coats of approved paint of a color as selected and approved by the City Engineer.

1.3 TEMPORARY DRAINAGE:

The Contractor shall maintain open channels for the proper disposal of surface runoff. Sediment collecting in existing or new drainage structures shall be removed. No abutting property shall be adversely affected by the Contractor's inability to control the methods and procedures of construction.

1.4 WATER FOR CONSTRUCTION:

Water for construction shall be provided and metered by the City of Marlborough. However, the Contractor through means of water pumper truck or other equipment as needed (at the expense of the Contractor) shall apply and/or spread the water as directed by the City Engineer for dust control.

Any use of hydrants for water is expressly prohibited without a prior written request by the Contractor and written approval by the City Engineer. Use of temporary bypass water mains, hydrants, and services for construction water is prohibited. Any hydrants approved for use by the Contractor shall be opened and closed by the DPW on a daily basis.

1.5 MATERIALS STORAGE:

Material storage in the work area will be limited, at best, and will be under constant review by the City Engineer. Materials stored on site shall be the sole responsibility of the Contractor of record and will not be monitored by any agency of the City and its employees.

Temporary storage areas shall be cleaned and restored to original conditions upon completion of the work.

1.6 SANITARY FACILITIES:

The Contractor shall provide and maintain in a sanitary condition, enclosed, weather-tight, chemical toilets for the use of all construction personnel at a location with in the contract limit lines. Installation of toilets shall be in accordance with all applicable codes and regulations of the authorities having jurisdiction. The number of facilities required shall be in accordance with State and local applicable codes.

2.0 MATERIALS

No materials are specified in this section.

3.0 CONSTRUCTION METHODS

No construction methods are specified in this section.

4.0 MEASUREMENT AND PAYMENT

No measurement and payment are specified in this section.

SAFETY

1.0 GENERAL

1.1 DESCRIPTION OF WORK:

Safety signing for Construction Operations shall include furnishing, positioning, repositioning, maintaining, and removing as needed and/or as directed: regulatory, warning, and guide signs together with their supports.

Reflectorized drums with warning lights shall be furnished, positioned, repositioned, maintained, and removed as needed and/or directed.

Payment for police details shall also be included as part of this section.

RELATED SECTIONS:

Attention is directed to the General Conditions, Special Conditions and Contract Drawings. Other related sections include:

Section 0010 – Control of Work

2.0 MATERIALS

2.1 SIGNS:

Materials shall conform to Massachusetts Department of Public Works, Standard Specifications for Highways and Bridges, 1988, (or latest revision) Section 828 and 840 and shall be in conformance with the Manual on Uniform Traffic Control Devices, latest edition. The entire area of the signs shall be reflectorized with reflective sheeting consisting of spherical lens elements embedded with a transparent plastic having a smooth, flat outer surface. The sheeting shall be weather resistant, having a protected pre-coated adhesive backing conforming to the applicable requirements of Federal Specification L-S-300A (current issue).

It is recognized that technological progress may develop new and satisfactory materials and nothing in this specification shall be interpreted to exclude new materials that are acceptable to the Engineer.

2.2 REFLECTORIZED DRUMS:

Non-metallic reflectorized drums shall conform to Massachusetts Department of Public Works, Standard Specifications for Highways and Bridges, 1988, (or latest revision) Subsection M9.30.0. Newly developed products providing equivalent target value and stability that are acceptable to the Engineer may be used under this item.

All drums shall be equipped with functioning warning lights and shall conform to the MUTCD Subsection 6D-5 for Type A or Type C.

3.0 CONSTRUCTION METHODS

3.1 PERSONAL PROTECTION:

The Contractor, in general, is solely responsible for safety on the job site. The Contractor is required to comply with all OSHA health and safety regulations regarding personal protection of employees. Hard hats shall be worn at all times during construction operations. Additional personal protection equipment shall be donned as required according the Contractor's approved Health and Safety Plan for this project.

3.2 SAFETY SIGNING:

The Contractor shall submit sign placement and sign size sketches showing the proposed sign setups to be used to provide the necessary traffic control and protection during the progress of the work. Signs not in effect shall be covered by the Contractor.

Signs which are damaged or are missing from their location shall be replaced by the Contractor without additional compensation.

All signs shall be maintained in a manner satisfactory to the Engineer, including the removal of dirt or road film that causes as reduction in sign reflective efficiency.

3.3 REFLECTORIZED DRUMS

All drums shall be maintained in manner satisfactory to the Engineer, including the removal of dirt or road film that causes a reduction in sign reflective efficiency. Any drum which is equipped with a non-functioning warning/flashing light shall be replaced as soon as possible. The number of and placement of drums shall be determined by the Engineer and the Safety Officer.

3.4 POLICE DETAILS

The Contractor shall use police details for traffic control as directed by the Chief of Police or the Engineer. The Contractor shall schedule all details directly through the Police Department. A minimum of two hours notice is required for any detail cancellations. The City shall not reimburse the Contractor for any charges incurred as a result of the Contractor's failure to provide sufficient notice.

4.0 MEASUREMENT AND PAYMENT

4.1 MEASUREMENT:

Measurement of Safety Controls for Construction Operations shall be made as a lump sum. The use of Reflectorized Drums shall be paid for as part of Safety Controls for Construction Operations.

Measurement of safety signage shall be based on the square footage in place, as determined by the Engineer or his designee.

No measurement or payment shall be made for personal protection equipment. These items are considered the Contractor's responsibility.

Measurement for police details shall be based on the number of hours worked by the detail officer.

Measurement for Safety Controls shall be based on lump sum for the entire project that includes all reflectorized drums, temporary traffic management signage, variable message boards and traffic cones.

4.2 PAYMENT

The contractor will be paid for Safety Controls for Construction Operations in equal amounts on each estimate based on the number of months estimated to complete the work.

Payment for reflectorized drums, temporary traffic management signage, variable message boards and traffic cones, shall be at the contract unit price Safety Controls for Construction Operations Lump Sum.

Payment for safety signage shall be based on the contract unit price per square footage of signage as described in Part 4.1 of this specification. The contract unit price per square foot shall include al hardware necessary for placement, including but not limited to fasteners and posts.

The Contractor shall be responsible for paying the detail officers for time worked. The City will reimburse, from the Police Detail line item, the Contractor for those costs upon submission by the Contractor of evidence that the detail officers were paid. There shall be no mark-up allowed for Contractor overhead, profit, or other cost. The Contractor shall only be reimbursed the actual invoiced cost of the detail officer.

4.3 PAYMENTS ITEMS:

Item #	Item	Uint
851	Safety Controls for Construction Operations	LS
852	Safety Signage for Construction Operations	SF
999.1	Police Details	ALL

SECTION 201
BASINS, MANHOLES AND INLETS

1.0 GENERAL

1.1 DESCRIPTION OF WORK:

This work shall consist of the construction of manholes, inlets and basins in accordance with the specifications, and in close conformity with the lines and grades shown on the plans or established by the Engineer.

2.0 MATERIALS

Concrete for these structures shall meet the requirements of Section 901 Cement Concrete Masonry – Massachusetts Highway Department, Standard Specifications for Highway and Bridges. Other materials shall meet the requirements specified in the following Subsections of Division III, Materials - Massachusetts Highway Department, Standard Specifications for Highway and Bridges:

Clay Brick	M4.05.2
Cement Concrete Block	M4.05.1
Precast Units	M4.02.14
Cement Mortar	M4.02.15
Reinforcing Bars	M8.01.1
Iron Castings	M8.03.0
Steel Castings	M8.03.2
Dry Stone Masonry	M9.04.9

3.0 CONSTRUCTION METHODS

3.1 GENERAL:

Basins, manholes and inlets shall be built to the lines, grades, dimensions and design shown on the plans and as directed with the necessary frames, covers, grates, hoods, etc., and in accordance with these specifications.

Bricks and concrete blocks shall be soaked in water before laying. A water connection to a City hydrant will be made available to the Contractor. All brick joints shall be thoroughly flushed full of mortar and no joint on the inside face shall be greater than ⅛ inch. After the bricks are laid, the joints shall be pointed on the outside. The outside shall be plastered with ½ inch thick mortar coat. Concrete block shall be used as an alternative to three rows of clay brick in drainage only.

New precast catch basins shall be constructed with a four foot sump. The joints between precast sections of a structure shall be sealed to be water tight.

No structure shall be backfilled until all mortar has completely set.

Frame castings for basins, manholes and inlets shall be set in full mortar beds true to lines and grades as directed. Where directed the castings shall be temporarily set at such grades as to provide drainage during the construction. Cement concrete collars

shall be placed around castings after the final setting of the casting as shown on the plan and as directed.

Weep holes shall be built into the walls of precast units. Each weep hole shall have a 4 inch opening to carry water through the wall of the structure. ½ cubic yard of ¾" crushed stone shall be placed around the outside of each weep hole.

4.0 MEASUREMENT AND PAYMENT

4.1 MEASUREMENT:

Measurement for basins, manholes and hoods shall be each unit complete.

Transportation, delivery and installation of all castings will be in the contract unit bid price for the kind of structure involved.

4.2 PAYMENT:

The accepted quantities basins, manholes and hoods shall be paid for at the contract unit price each, complete in place, which shall not include the cost of the castings. Payment shall also include the sawcutting of hma and/or cement concrete, removal and disposal of the existing catch basins, manholes, inlets and hoods which are to be replaced, any inverts/tables required in manholes, removal of any surplus and/or excess material as part of the installation of a new basin, manhole, inlet and coring of structures to accommodate all utility connections.

Payment for concrete collars shall be included in the contract unit price of the structure involved.

Furnishing new castings shall be paid for at the contract unit price each under the item for Frame & Grate or Cover (Municipal Standard).

4.3 PAYMENT ITEMS:

Item #	Item	Unit
201.5	Catch Basin – Municipal Standard	EA
202.01	Manhole – Municipal Standard	EA
224.12	12" Hood	EA
224.18	18" Hood	EA
222.2	Frame & Grate or Cover (Municipal Standard)	EA

SECTION 230
STORM DRAINS

1.0 GENERAL

1.1 DESCRIPTION OF WORK:

This work shall consist of the construction of storm drains, hereinafter referred to as "Pipe", in accordance with these specifications and in close conformity with the lines and grades shown on the plans or established by the Engineer.

2.0 MATERIALS

Materials shall meet the requirements specified in the following Subsections of Division III, Materials - Massachusetts Highway Department, Standard Specifications for Highway and Bridges:

Reinforced Concrete Pipe	M5.02.1
Ductile Iron Pipe and Fittings	M5.05.3
Plastic (PVC) Pipe	M5.03.7
Mortar for Pipe Joint	M4.02.15
Crushed Stone	M2.01.5

3.0 CONSTRUCTION METHODS

3.1 GENERAL:

The bedding for the Pipe shall be shaped to conform reasonably close to the lower 10% of the pipe and recesses excavated for bells of bell and spigot pipes. All pipe shall be laid to the specified line and grade, with a firm bearing throughout each length and with bell ends uphill.

Drainage pipe shall be backfilled with gravel having no stone greater than 3 inches.

The joint of reinforced concrete pipe shall thoroughly cleaned and wetted with water before being joined. Reinforced concrete pipe shall be joined using a flexible water tight rubber gasket conforming to ASTM C443 and the filling the joint be completed with cement mortar. The invert shall be kept smooth and free of obstructions.

The drain trench shall be excavated to the depth designated on the plans or, if directed, to a stratum of impervious material.

The excavation shall proceed in advance of the actual drain construction only to the extent the Engineer direct.

Where rock is encountered in the excavation, no part of any rock remaining in the trench shall come within six inches of any portion of the pipe.

Joints shall be grouted or sealed unless otherwise specified on the plans or in the Special Provisions.

The Contractor shall be responsible for keeping the backfill material clean and free of objectionable material from a line one inch below the flow line of the pipe to the top of the trench.

Existing drainage infrastructure is to be field cored with the proper equipment approved and satisfactory to the Engineer.

Removal and disposal of the existing drain pipe shall be included in contract unit price per foot of kind of pipe at no additional cost to the City.

4.0 MEASUREMENT AND PAYMENT

4.1 MEASUREMENT:

Pipes shall be measured in place and the quantity to be paid for shall be the length actually constructed as directed within the limits specified below.

For measurement purposes the end of the pipe in closed structures shall be considered at the inside face of the wall.

4.2 PAYMENT:

Pipe drains shall be paid for at the contract unit price per foot of the kind of pipe required, installed and complete in place including but not limited too; sawcutting of hma and/or cement concrete, removal of excess and/or surplus material due to the installation of new pipe, dewatering, bedding material, backfilling and restoring trench to subgrade.

Excavation and removal of existing drain pipe, for the purpose of installation of proposed pipe shall be included in the contract unit price per foot of the kind of pipe required, installed and complete in place.

4.3 PAYMENT ITEMS:

Item #	Item	Unit
241.12	12” Reinforced Concrete Pipe	FT
241.18	18” Reinforced Concrete Pipe	FT

SECTION 300
COPPER TUBING

1.0 GENERAL

1.1 DESCRIPTION OF WORK:

The work to be performed under this section consists of furnishing the material, equipment, and labor to replace and/or install water services at the locations indicated on the Drawings as specified herein and where directed by the Engineer.

1.2 RELATED SECTIONS:

Attention is directed to the General Conditions and Special Conditions which are hereby made a part of this section. Other related sections include:

Section 300 - Water Mains and Fittings
Section 300 - Valves and Boxes
Section 300 - Excavation
Section 300 - Backfilling

1.3 REFERENCED STANDARDS:

City of Marlborough, Department of Public Works, Water use Regulations

2.0 MATERIALS

2.1 SERVICE PIPING:

Service piping shall be copper type k tubing. The service piping shall conform to the above- referenced standards for polyethylene with a pressure rating of 200 psi and a diameter of ¾ inch, 1-inch, 2-inch diameter as specified on the plans, or as directed by Engineer. Copper Tube sizes shall be used to allow the use of compression fittings without special adapters.

2.2 SERVICE BRASS:

All fittings, connections, corporations, curb stops, and service appurtenances shall be service brass as follows: Service brass shall conform to AWWA Standard C-800 (latest revision) and pack joint end connections shall consist of Buna-N beveled gasket for watertight seal. An independent, split-clamp locking device or stainless steel beveled gripper shall be incorporated in the design for additional restraint. Ford, Mueller, or Red Head service brass is accepted without substitute.

2.3 CURB STOP:

The curb stop shall be as noted in the City of Marlborough Water Regulations. Adapters may be required in order to connect to existing service. Curb stops shall be copper to copper thread, open right with drain, as manufactured by Farnum or Mueller Co.

2.4 SERVICE BOX:

The service box shall be (Erie Style) with ¾" rod cover with counter sunk 1" brass plug, with 1" pipe thread and 4-1/2' to 5-1/2' extension type.

3.0 CONSTRUCTION METHODS

3.1 INSTALLATION OF CORPORATION STOPS:

Services taps shall be made by means of direct wet tap into the Ductile Iron Main. Installation shall conform to the manufacturer's recommended instructions. Or as directed by the inspector for the Marlborough Department of Public Works Water Division.

3.2 INSTALLATION OF SERVICE TUBING:

Care shall be exercised in the placing and laying of tubing to be sure that the pipe does not have kinks or is not placed on sharp stones or ledge which would cause damage to the pipe. Place in a 12-inch sand envelop around pipe, as shown on the Drawings, adjacent to, above and below the tubing. No stone shall be dropped on the tubing until the depth of backfill above the tubing is in excess of one foot. Blue metallic warning tape shall be placed 18 to 48-inches below finish grade. Insert stiffeners shall be installed when compression connections are made to PVC pipe.

Make connections of new services with existing services unless otherwise directed by the Engineer. Use bushings and/or couplings as required to connect the new tubing with existing services.

4.0 MEASUREMENT AND PAYMENT

4.1 MEASUREMENT:

Measurement for payment of service connections shall be based on the foot of services installed complete and in place.

4.2 PAYMENT:

Payment for water services shall be based on the contract unit price per foot installed and measured as described in Part 4.1 of this Section. The contract unit price shall include all excavation and backfilling, blue water metallic warning tape, direct wet tap connection to water main (if necessary), curb stop, service box, corporation cock (if necessary), adaptors, sawcutting of pavement and cement concrete, compaction, tubing, 12-inch sand envelop typical, all materials, equipment and labor required to furnish and install water services, removal and disposal of all existing water services being replaced, removal and disposal of existing curb stop, service box, corporation cocks and restoring trench surface to grade.

4.3 PAYMENT ITEMS:

Item #	Item	Unit
347.075	¾ In. Copper Tubing – Type K	FT

SECTION 403
RECLAIMED BASE COURSE

1.0 GENERAL

1.1 DESCRIPTION OF WORK:

This work shall consist of manufacturing a stabilized base course through the recycling a depth of 18 inches of existing pavement structure and acceptable sub-base material. The combination of pavement and sub-base material is to be uniformly crushed, pulverized and blended, then spread, graded and compacted to the lines and grades shown on the plans or established by the Engineer.

2.0 MATERIALS

All reclaim material shall conform to the requirements of following Subsections of Division III, Materials - Massachusetts Highway Department, Standard Specifications for Highway and Bridges: M1.11.0

3.0 CONSTRUCTION METHODS

3.1 GENERAL:

Reclaiming operations shall not be permitted when the existing pavement or sub-base contain frost, when the sub-base is excessively wet as determined by the Engineer, nor when the air or surface temperature is below 40˚F.

Reclaiming operation shall not commence before April 15 and shall terminate on or before October 15, unless otherwise approved in writing by the Engineer

Prior to starting the reclaiming operations, the Contractor shall locate and protect existing drainage and utility structures and underground pipe, culverts, conduit and other appurtenances. The locations of all castings removed shall be given, in writing, to the Engineer.

The recycling equipment shall have a positive depth control to insure a uniform depth of processing. The equipment shall the ability to process the complete design depth specified into a homogeneous mass. It shall also be capable of crushing all oversized material encountered except ledge, or boulders larger than 8” in diameter.

A minimum of fourteen days prior to the proposed start of the work, the Contractor shall submit in writing to the Engineer for approval, a description of the specific equipment and construction method to be used to perform the work.

Failure to meet gradation requirements or an insufficient production rate may be considered cause for rejection of the equipment, the construction method or both. The Contractor shall then submit in writing to the Engineer for approval the changes which shall be incorporated to obtain satisfactory results.

Otherwise, failure to meet gradation requirements due to improper equipment or construction methods shall not constitute a reason for any additional compensation for the import and blending of any aggregate to meet the deficiencies.

At least one vibratory roller shall be used on each reclaimed surface, and shall have a compacting width of not less than 5 feet. Each roller shall have a gross mass of not less than 16 tons.

Approved equipment shall be maintained in satisfactory working conditions at all times.

All drainage, utility and municipal structures are to be referenced and lowered to a minimum depth 6" below the proposed reclaimed base course. Lowered structures shall be covered with steel plates.

The Contractor will be responsible for the coordination with the respective utility companies for the lowering and raising of privately owned structures and gate boxes. The reclaiming operation shall not begin until all structures and boxes are lowered.

It shall be the Contractor's responsibility to maintain drainage functioning properly in the areas under construction up to the time when the final system is put into use. Any drainage structure found to be deteriorated below the plated depth shall be rebuilt from the bottom of the deterioration to the plated depth.

Prior to the start of the reclamation process, the areas adjacent to the areas to be processed shall be saw cut full depth and the entire area to be reclaimed shall be made free all trash, sand, dirt, organic matter and other undesirable material, to the satisfaction of the Engineer.

Reclamation work shall be done on one-half the road width at a time. One way traffic will be allowed only during working hours with traffic police present. Two-way traffic shall be maintained at all other times. Suitable ramping shall be in place at the beginning and end of work zone and each driveway and/or entrance to allow for smooth and safe travel. Ramping shall take place over a minimum of two feet.

Existing surplus reclaim material shall be used for grading sidewalks as directed by the Engineer, when available, at no additional compensation. All unsuitable material and/or excess reclaim material not to be used on the project shall become the property of the Contractor to be properly disposed of outside the project limits.

The reclaimed material shall be rolled. Compacted and fine graded to the specified cross section(s) and/or grades shown or established by the Engineer.

At the end of each day's progress the Contractor shall apply water to the roadway to control dust. At the end of each work week the Contractor shall apply Calcium Chloride in accordance with the applicable provisions of Section 440 – Roadway Dust Control. The use of Calcium Chloride may also be directed by the Engineer more frequently than stated above should field conditions warrant a more aggressive means of dust control.

A grader, roller and water wagon shall be maintained on the project site during the reclamation process. The Contractor shall submit to the Engineer, in writing, a twenty-four hour availability telephone number for any emergency maintenance dictated by the

weather conditions or as determined by the Engineer, for repair, compaction and dust control. Should the Contractor not respond to an emergency call and the Department of Public Work have to respond in the Contractor's place, the Contractor shall be responsible for all cost incurred by the Department of Public Work to respond to the emergency.

Both gradation and compaction tests at 50 foot interval, the exact location to be determined by the Engineer, with 97% compaction required, shall be required in the reclaimed base area. Both gradation and compaction tests shall be performed 24 hours prior to the binder course of pavement being placed.

4.0 MEASUREMENT AND PAYMENT

4.1 MEASUREMENT:

Reclaimed Base Course shall be measured in place, to the limits specified on the plans or as directed by the Engineer. No deduction will be made for surface structures.

Both gradation and compaction testing shall be included in the price specified for Item – Reclaimed Base Course and no measurement is required.

Structures raised from the plated depth to the bituminous concrete binder course elevation or the bituminous concrete top course elevation (in one operation) shall be measured as a remodeled unit each, complete and approved.

Structures adjusted from the bituminous concrete binder course elevation to the finished grade elevation shall be measured as an adjusted unit each, complete and approved.

Structures rebuilt shall be measured by the average height in vertical feet and tenth of a foot from the bottom of the deterioration to the plated depth. Structures damaged below the plated depth, due to the Contractor's negligence, shall be measured and deducted from the vertical foot measurement. Raising the structure from the plated depth will be measured as stated above for a remodeled unit.

Water gate boxes raised from the plated depth shall be measured as an adjust unit each, complete and approved. If the top section of the water gate box is damaged or broken this is to be replaced with new and considered incidental to this item and no additional compensation will be allowed.

4.2 PAYMENT:

The accepted quantity of reclamation as measured above shall be paid for at the contract unit price bid under Item 403 Reclaimed Base Course. This unit price shall include all compensation for crushing, pulverizing, blending, spreading, grading, compacting, gradation and compaction test, blending with additional material to achieve proper base material as directed by the Engineer, moving the processed material to allow for modifications to the remaining sub-base and/or subgrade, moving reclaimed material from one location to another within the project and any incurred costs resulting from the Contractor's decision to process off site. The unit price bid shall also include compensation for all costs associated with the lowering and plating of the water gates and structures. It shall also include full compensation for all labor, tools, equipment,

material and all incidental work necessary to complete the work as specified. It shall also include the removal, stacking and resetting of existing castings scheduled to be re-used and replacing any water gate boxes damaged caused by the contractors operations.

Removal and disposal of unsuitable material, surplus reclaim material, or any sub-base/subgrade material necessary for grade changes shall be included in the unit price per square yard for Item 403-Reclaimed Base Course.

Grading and compacting the sub-base and/or subgrade resulting from the removal of unsuitable material shall be paid for at the contract unit price per square yard for Item 170. – Fine Grading and Compaction – Subgrade Areas.

Adjustment of drainage structures shall be paid for at the contract unit price each for item 220.0 - Drainage Structure Adjusted.

Rebuilding of drainage structures shall be paid for at the contract unit price per vertical foot for Item 220.2 - Drainage Structure Rebuilt.

Raising of lowered drainage structures shall be paid for at the contract unit price each for Item 220.5 - Drainage Structures Remodeled.

Raising of lowered sanitary sewer structures shall be paid for at the contract unit price each for Item 220.8 – Sanitary Structures Remodeled.

Raising of lowered water gate boxes shall be paid for at the contract unit price each for Item 358 – Gate Box Adjusted.

Reclaimed base course shall be paid for at the contract unit price for Item 403. Reclaimed Base Course.

Calcium chloride shall be paid for at the contract unit price for Item 440.Calcium Chloride.

No payment shall be made for lowering and raising of privately owned structures and gate boxes.

4.3 PAYMENT ITEMS:

Item #	Item	Unit
170	Fine Grading & Compaction – Subgrade	SY
220	Drainage Structure Adjusted	EA
220.2	Drainage Structure Rebuilt	FT
220.5	Drainage Structure Remodeled	EA
220.8	Sanitary Structure Remodeled	EA
358	Gate Box Adjusted	EA
403	Reclaimed Base Course	SY
440	Calcium Chloride	LB

APPENDIX A

LABOR REGULATIONS

1. MINIMUM MINORITY PERCENTAGES

A. The following minimum minority percentages are applicable where they apply to contracts with an advertised estimated value of $100,000 or more and apply to state-assisted and state regulated programs, activities and services.

Location		Not Less than
Boston	Impact Area Jamaica Plain (part), Mattapan, South Cove, Chinatown, Bay Village, Roxbury, Dorchester, South End):.	30%
Boston:	Other Areas:	10%
Cambridge:		12%
New Bedford:		18%
Springfield:		10%
All other cities and towns:		5%

B. These percentages shall apply to the Contractor and to all Subcontractors, regardless of tier, for all on-site Work.

EEO PROCESSING REQUIREMENTS

1. RELATED DOCUMENTS

A. This section supplements the General Conditions.

B. Consult the individual sections of the specifications for the specific requirements of this Contract.

2. EEO WORK FORCE REPORTING PROCEDURES

A. The Contractor shall provide the following information to the Owner on copies of the forms found at the end of this Section.

(1.) **Quarterly Projected Work Force Reports**: The Contractor shall prepare projected work force tables on a quarterly basis. These reports shall be broken done into projections by week of workers required in each trade.

(a.) Updated copies shall be furnished to the Owner's EEO Officer one week in advance of the commencement of work and for each quarter thereafter.

(b.) Quarters shall begin on January 1, April 1, July 1, and October 1**.**

(c.) No work shall begin until projected work force tables are received by the Owner's EEO Officer.

(2.) **Weekly Manpower Reports**: The Contractor shall prepare a report after each week of activity, reflecting the actual working hours of all personnel identified as minority or non-minority.

(a.) This report shall be received by the Owner no later than the Friday following the week reported**.**

(b.) Failure to provide information shall result in sanctions as provided in the General Conditions

CITY OF MARLBOROUGH

MARLBOROUGH, MASSACHUSETTS 01752-3812

QUARTERLY PROJECTED WORK FORCE

Name of Contractor _____

Address: _____

Telephone: _____ Fax _____

Trades to be Utilized _____

Estimated Total Hours to Complete Work

Total Contract Dollar Value: _____ Name of Project _____

Quarter: ☐ Jan 1 - Mar 31 ☐ Apr 1 - Jun 30 ☐ Jul 1 - Sep 30 ☐ Oct 1 -Dec 31, 201 _____

Week Ending	Projected Total Hours of all Personnel	Projected Total of All Minority Hours	Trades Used this Week

Note: A revised table must be submitted if any changes on projections occur.

Prepared by: _____

Title: _____

Date: _____

CONTRACTOR'S WEEKLY MANPOWER REPORT

City of Marlborough _____ Project No. _____ Contract Amount $ _____

General Contractor: _____ Minority Goal

Name of Contractor Filing Report: _____ Trade(s):

Check Here if you are a non-filed Subcontractor ☐

Week Ending: _____ Report No.: _____

☐ Check Here if this is a Final Report

Date Work Began: _____ Date Work Completed _____

Job Category	# Employees	Weekly Total Manhours	# Min	Weekly Total Minority Manhours	Weekly % Minority Manhours	Total Manhours to Date	Total Minority Manhours to Date	%of Minority Manhours to Date

Mail Reports to: Department of Public Works – MBE/WBE Coordinator
Engineering Division - 135 Neil Street
Marlborough, MA 01752

Prepared by: _____

Title: _____

Date: _____ 20_____

APPENDIX B

STATE WAGE RATES AND FORMS
LABOR PROVISIONS

1. WAGE RATES

A. The rate per hour to be paid to mechanics, apprentices, teamsters, chauffeurs, and laborers employed on the Work shall not be less than the rate of wages in the attached "Minimum Wage Rates" as determined by the Director of the Department of Labor and Work Force Development. This schedule shall continue to be the minimum rate of wages for said employees during the life of this Contract. Any questions relative to the applicability of any wage rate shall be directed to the Department of Labor and Workforce Development.

B. Keep posted on the site a legible copy of said schedule. Provide the Owner, on a weekly basis, and keep an on-site file of the wage rates and classifications of labor employed on this Work in order that they may be available for inspection by the Owner, Designer, or any other agency having jurisdiction.

C. Apprentices employed pursuant to this determination of wage rates must be registered and approved by the State Apprenticeship Council wherever rates for journeymen or apprentices are not listed.

D. Pay reserve police officers employed on the Work the prevailing rate of wages paid to regular police officers as required by MGL c149 § 34B, as amended. Such police officers shall be covered by Worker's Compensation Insurance and Employers Liability Insurance provided by the Contractor.

E. The Contractor and all subcontractors shall provide certified payroll affidavits verifying compliance with MGL c.149 §§26 - 27H.

F. The Contractor and all subcontractors shall provide a Statement of Compliance within 15 days of the completion of its portion of the work. This statement shall be submitted to the Owner on the form found elsewhere in this section.

G. The Contractor and all its subcontractors shall furnish to the Owner, with the first certified payroll report, documentation indicating that each employee has successfully completed ten (10) hours of a course in construction safety and health. This course must be approved by the United States Occupational Health and Safety Administration (OSHA)

PREVAILING WAGE RATES FOLLOW THIS PAGE.

THE COMMONWEALTH OF MASSACHUSETTS
EXECUTIVE OFFICE OF LABOR AND WORKFORCE DEVELOPMENT
DEPARTMENT OF LABOR STANDARDS

DEVAL L. PATRICK
Governor

Prevailing Wage Rates

As determined by the Director under the provisions of the Massachusetts General Laws, Chapter 149, Sections 26 to 27H

RACHEL KAPRIELIAN
Secretary

HEATHER E. ROWE
Director

Awarding Authority: City of Marlborough

Contract Number: ED 2014-14 **City/Town:** MARLBOROUGH

Description of Work: Reclamation and resurfacing of roadway, improvements to drainage utilities, water utilities, replacement of curbing and sidewalks.

Job Location: Houde Street

Information about Prevailing Wage Schedules for Awarding Authorities and Contractors

- This wage schedule applies only to the specific project referenced at the top of this page and uniquely identified by the "Wage Request Number" on all pages of this schedule.
- An Awarding Authority must request an updated wage schedule from the Department of Labor Standards ("DLS") if it has not opened bids or selected a contractor within 90 days of the date of issuance of the wage schedule. For CM AT RISK projects (bid pursuant to G.L. c.149A), the earlier of: (a) the execution date of the GMP Amendment, or (b) the bid for the first construction scope of work must be within 90-days of the wage schedule issuance date.
- The wage schedule shall be incorporated in any advertisement or call for bids for the project as required by M.G.L. c. 149, § 27. The wage schedule shall be made a part of the contract awarded for the project. The wage schedule must be posted in a conspicuous place at the work site for the life of the project in accordance with M.G.L. c. 149 § 27. The wages listed on the wage schedule must be paid to employees performing construction work on the project whether they are employed by the prime contractor, a filed sub-bidder, or any sub-contractor.
- All apprentices working on the project are required to be registered with the Massachusetts Division of Apprentice Standards (DAS). Apprentice must keep his/her apprentice identification card on his/her person during all work hours on the project. An apprentice registered with DAS may be paid the lower apprentice wage rate at the applicable step as provided on the prevailing wage schedule. **If an apprentice rate is not listed on the prevailing wage schedule for the trade in which an apprentice is registered with the DAS, the apprentice must be paid the journeyworker's rate for the trade.**
- The wage rates will remain in effect for the duration of the project, except in the case of multi-year public construction projects. For construction projects lasting longer than one year, awarding authorities must request an updated wage schedule. Awarding authorities are required to request these updates no later than two weeks before the anniversary of the date the contract was executed by the awarding authority and the general contractor. For multi-year CM AT RISK projects, awarding authority must request an annual update no later than two weeks before the anniversary date, determined as the earlier of: (a) the execution date of the GMP Amendment, or (b) the execution date of the first amendment to permit procurement of construction services. Contractors are required to obtain the wage schedules from awarding authorities, and to pay no less than these rates to covered workers. The annual update requirement is not applicable to 27F "rental of equipment" contracts.
- Every contractor or subcontractor which performs construction work on the project is required to submit weekly payroll reports and a Statement of Compliance directly to the awarding authority by mail or email and keep them on file for three years. Each weekly payroll report must contain: the employee's name, address, occupational classification, hours worked, and wages paid. Do not submit weekly payroll reports to DLS. A sample of a payroll reporting form may be obtained at http://www.mass.gov/dols/pw.
- Contractors with questions about the wage rates or classifications included on the wage schedule have an affirmative obligation to inquire with DLS at (617) 626-6953.
- Employees not receiving the prevailing wage rate set forth on the wage schedule may report the violation to the Fair Labor Division of the office of the Attorney General at (617) 727-3465.
- Failure of a contractor or subcontractor to pay the prevailing wage rates listed on the wage schedule to all employees who perform construction work on the project is a violation of the law and subjects the contractor or subcontractor to civil and criminal penalties.

Issue Date: 06/24/2014 **Wage Request Number:** 20140624-028

Classification	Effective Date	Base Wage	Health	Pension	Supplemental Unemployment	Total Rate
Construction						
(2 AXLE) DRIVER - EQUIPMENT *TEAMSTERS JOINT COUNCIL NO. 10 ZONE B*	06/01/2014	$31.30	$9.41	$8.80	$0.00	$49.51
	08/01/2014	$31.30	$9.91	$8.80	$0.00	$50.01
	12/01/2014	$31.30	$9.91	$9.33	$0.00	$50.54
	06/01/2015	$31.65	$9.91	$9.33	$0.00	$50.89
	08/01/2015	$31.65	$10.41	$9.33	$0.00	$51.39
	12/01/2015	$31.65	$10.41	$10.08	$0.00	$52.14
	06/01/2016	$32.15	$10.41	$10.08	$0.00	$52.64
	08/01/2016	$32.15	$10.91	$10.08	$0.00	$53.14
	12/01/2016	$32.15	$10.91	$10.89	$0.00	$53.95
(3 AXLE) DRIVER - EQUIPMENT *TEAMSTERS JOINT COUNCIL NO. 10 ZONE B*	06/01/2014	$31.37	$9.41	$8.80	$0.00	$49.58
	08/01/2014	$31.37	$9.91	$8.80	$0.00	$50.08
	12/01/2014	$31.37	$9.91	$9.33	$0.00	$50.61
	06/01/2015	$31.72	$9.91	$9.33	$0.00	$50.96
	08/01/2015	$31.72	$10.41	$9.33	$0.00	$51.46
	12/01/2015	$31.72	$10.41	$10.08	$0.00	$52.21
	06/01/2016	$32.22	$10.41	$10.08	$0.00	$52.71
	08/01/2016	$32.22	$10.91	$10.08	$0.00	$53.21
	12/01/2016	$32.22	$10.91	$10.89	$0.00	$54.02
(4 & 5 AXLE) DRIVER - EQUIPMENT *TEAMSTERS JOINT COUNCIL NO. 10 ZONE B*	06/01/2014	$31.49	$9.41	$8.80	$0.00	$49.70
	08/01/2014	$31.49	$9.91	$8.80	$0.00	$50.20
	12/01/2014	$31.49	$9.91	$9.33	$0.00	$50.73
	06/01/2015	$31.84	$9.91	$9.33	$0.00	$51.08
	08/01/2015	$31.84	$10.41	$9.33	$0.00	$51.58
	12/01/2015	$31.84	$10.41	$10.08	$0.00	$52.33
	06/01/2016	$32.34	$10.41	$10.08	$0.00	$52.83
	08/01/2016	$32.34	$10.91	$10.08	$0.00	$53.33
	12/01/2016	$32.34	$10.91	$10.89	$0.00	$54.14
ADS/SUBMERSIBLE PILOT *PILE DRIVER LOCAL 56 (ZONE 1)*	08/01/2013	$84.21	$9.80	$18.17	$0.00	$112.18
	08/01/2014	$87.36	$9.80	$18.17	$0.00	$115.33
	08/01/2015	$90.51	$9.80	$18.17	$0.00	$118.48
AIR TRACK OPERATOR *LABORERS - ZONE 2*	06/01/2014	$31.10	$7.30	$12.10	$0.00	$50.50
	12/01/2014	$31.60	$7.30	$12.10	$0.00	$51.00
	06/01/2015	$32.10	$7.30	$12.10	$0.00	$51.50
	12/01/2015	$32.60	$7.30	$12.10	$0.00	$52.00
	06/01/2016	$33.10	$7.30	$12.10	$0.00	$52.50
	12/01/2016	$33.85	$7.30	$12.10	$0.00	$53.25
For apprentice rates see "Apprentice- LABORER"						
ASBESTOS REMOVER - PIPE / MECH. EQUIPT. *HEAT & FROST INSULATORS LOCAL 6 (BOSTON)*	06/01/2014	$31.58	$10.40	$5.95	$0.00	$47.93
	12/01/2014	$32.48	$10.40	$5.95	$0.00	$48.83
	06/01/2015	$33.43	$10.40	$5.95	$0.00	$49.78
	12/01/2015	$34.38	$10.40	$5.95	$0.00	$50.73

Classification	Effective Date	Base Wage	Health	Pension	Supplemental Unemployment	Total Rate
ASPHALT RAKER *LABORERS - ZONE 2*	06/01/2014	$30.60	$7.30	$12.10	$0.00	$50.00
	12/01/2014	$31.10	$7.30	$12.10	$0.00	$50.50
	06/01/2015	$31.60	$7.30	$12.10	$0.00	$51.00
	12/01/2015	$32.10	$7.30	$12.10	$0.00	$51.50
	06/01/2016	$32.60	$7.30	$12.10	$0.00	$52.00
	12/01/2016	$33.35	$7.30	$12.10	$0.00	$52.75
For apprentice rates see "Apprentice- LABORER"						
ASPHALT/CONCRETE/CRUSHER PLANT-ON SITE *OPERATING ENGINEERS LOCAL 4*	12/01/2013	$40.49	$10.00	$14.18	$0.00	$64.67
For apprentice rates see "Apprentice- OPERATING ENGINEERS"						
BACKHOE/FRONT-END LOADER *OPERATING ENGINEERS LOCAL 4*	12/01/2013	$40.49	$10.00	$14.18	$0.00	$64.67
For apprentice rates see "Apprentice- OPERATING ENGINEERS"						
BARCO-TYPE JUMPING TAMPER *LABORERS - ZONE 2*	06/01/2014	$30.60	$7.30	$12.10	$0.00	$50.00
	12/01/2014	$31.10	$7.30	$12.10	$0.00	$50.50
	06/01/2015	$31.60	$7.30	$12.10	$0.00	$51.00
	12/01/2015	$32.10	$7.30	$12.10	$0.00	$51.50
	06/01/2016	$32.60	$7.30	$12.10	$0.00	$52.00
	12/01/2016	$33.35	$7.30	$12.10	$0.00	$52.75
For apprentice rates see "Apprentice- LABORER"						
BLOCK PAVER, RAMMER / CURB SETTER *LABORERS - ZONE 2*	06/01/2014	$31.10	$7.30	$12.10	$0.00	$50.50
	12/01/2014	$31.60	$7.30	$12.10	$0.00	$51.00
	06/01/2015	$32.10	$7.30	$12.10	$0.00	$51.50
	12/01/2015	$32.60	$7.30	$12.10	$0.00	$52.00
	06/01/2016	$33.10	$7.30	$12.10	$0.00	$52.50
	12/01/2016	$33.85	$7.30	$12.10	$0.00	$53.25
For apprentice rates see "Apprentice- LABORER"						
BOILER MAKER *BOILERMAKERS LOCAL 29*	01/01/2010	$37.70	$6.97	$11.18	$0.00	$55.85

Apprentice - *BOILERMAKER - Local 29*

Effective Date - 01/01/2010

Step	percent	Apprentice Base Wage	Health	Pension	Supplemental Unemployment	Total Rate
1	65	$24.51	$6.97	$11.18	$0.00	$42.66
2	65	$24.51	$6.97	$11.18	$0.00	$42.66
3	70	$26.39	$6.97	$11.18	$0.00	$44.54
4	75	$28.28	$6.97	$11.18	$0.00	$46.43
5	80	$30.16	$6.97	$11.18	$0.00	$48.31
6	85	$32.05	$6.97	$11.18	$0.00	$50.20
7	90	$33.93	$6.97	$11.18	$0.00	$52.08
8	95	$35.82	$6.97	$11.18	$0.00	$53.97

Notes:

Apprentice to Journeyworker Ratio:1:5

Classification	Effective Date	Base Wage	Health	Pension	Supplemental Unemployment	Total Rate
BRICK/STONE/ARTIFICIAL MASONRY (INCL. MASONRY WATERPROOFING) *BRICKLAYERS LOCAL 3 (LOWELL)*	03/01/2014	$45.96	$10.18	$17.55	$0.00	$73.69
	09/01/2014	$46.86	$10.18	$17.62	$0.00	$74.66
	03/01/2015	$47.42	$10.18	$17.62	$0.00	$75.22
	09/01/2015	$48.32	$10.18	$17.69	$0.00	$76.19
	03/01/2016	$48.89	$10.18	$17.69	$0.00	$76.76
	09/01/2016	$49.79	$10.18	$17.77	$0.00	$77.74
	03/01/2017	$50.36	$10.18	$17.77	$0.00	$78.31

Apprentice - *BRICK/PLASTER/CEMENT MASON - Local 3 Lowell*

Effective Date - 03/01/2014

Step	percent	Apprentice Base Wage	Health	Pension	Supplemental Unemployment	Total Rate
1	50	$22.98	$10.18	$17.55	$0.00	$50.71
2	60	$27.58	$10.18	$17.55	$0.00	$55.31
3	70	$32.17	$10.18	$17.55	$0.00	$59.90
4	80	$36.77	$10.18	$17.55	$0.00	$64.50
5	90	$41.36	$10.18	$17.55	$0.00	$69.09

Effective Date - 09/01/2014

Step	percent	Apprentice Base Wage	Health	Pension	Supplemental Unemployment	Total Rate
1	50	$23.43	$10.18	$17.62	$0.00	$51.23
2	60	$28.12	$10.18	$17.62	$0.00	$55.92
3	70	$32.80	$10.18	$17.62	$0.00	$60.60
4	80	$37.49	$10.18	$17.62	$0.00	$65.29
5	90	$42.17	$10.18	$17.62	$0.00	$69.97

Notes:

Apprentice to Journeyworker Ratio:1:5

BULLDOZER/GRADER/SCRAPER *OPERATING ENGINEERS LOCAL 4*	12/01/2013	$40.11	$10.00	$14.18	$0.00	$64.29

For apprentice rates see "Apprentice- OPERATING ENGINEERS"

CAISSON & UNDERPINNING BOTTOM MAN *LABORERS - FOUNDATION AND MARINE*	06/01/2014	$35.20	$7.30	$12.90	$0.00	$55.40
	12/01/2014	$35.95	$7.30	$12.90	$0.00	$56.15
	06/01/2015	$36.70	$7.30	$12.90	$0.00	$56.90
	12/01/2015	$37.45	$7.30	$12.90	$0.00	$57.65
	06/01/2016	$38.20	$7.30	$12.90	$0.00	$58.40
	12/01/2016	$39.20	$7.30	$12.90	$0.00	$59.40

For apprentice rates see "Apprentice- LABORER"

CAISSON & UNDERPINNING LABORER *LABORERS - FOUNDATION AND MARINE*	06/01/2014	$34.05	$7.30	$12.90	$0.00	$54.25
	12/01/2014	$34.80	$7.30	$12.90	$0.00	$55.00
	06/01/2015	$35.55	$7.30	$12.90	$0.00	$55.75
	12/01/2015	$36.30	$7.30	$12.90	$0.00	$56.50
	06/01/2016	$37.05	$7.30	$12.90	$0.00	$57.25
	12/01/2016	$38.05	$7.30	$12.90	$0.00	$58.25

For apprentice rates see "Apprentice- LABORER"

Classification	Effective Date	Base Wage	Health	Pension	Supplemental Unemployment	Total Rate
CAISSON & UNDERPINNING TOP MAN *LABORERS - FOUNDATION AND MARINE*	06/01/2014	$34.05	$7.30	$12.90	$0.00	$54.25
	12/01/2014	$34.80	$7.30	$12.90	$0.00	$55.00
	06/01/2015	$35.55	$7.30	$12.90	$0.00	$55.75
	12/01/2015	$36.30	$7.30	$12.90	$0.00	$56.50
	06/01/2016	$37.05	$7.30	$12.90	$0.00	$57.25
	12/01/2016	$38.05	$7.30	$12.90	$0.00	$58.25
For apprentice rates see "Apprentice- LABORER"						
CARBIDE CORE DRILL OPERATOR *LABORERS - ZONE 2*	06/01/2014	$30.60	$7.30	$12.10	$0.00	$50.00
	12/01/2014	$31.10	$7.30	$12.10	$0.00	$50.50
	06/01/2015	$31.60	$7.30	$12.10	$0.00	$51.00
	12/01/2015	$32.10	$7.30	$12.10	$0.00	$51.50
	06/01/2016	$32.60	$7.30	$12.10	$0.00	$52.00
	12/01/2016	$33.35	$7.30	$12.10	$0.00	$52.75
For apprentice rates see "Apprentice- LABORER"						
CARPENTER *CARPENTERS -ZONE 2 (Eastern Massachusetts)*	03/01/2014	$34.78	$9.80	$15.91	$0.00	$60.49
	09/01/2014	$35.55	$9.80	$15.91	$0.00	$61.26
	03/01/2015	$36.32	$9.80	$15.91	$0.00	$62.03

Apprentice - *CARPENTER - Zone 2 Eastern MA*

Effective Date - 03/01/2014

Step	percent	Apprentice Base Wage	Health	Pension	Supplemental Unemployment	Total Rate
1	50	$17.39	$9.80	$1.57	$0.00	$28.76
2	60	$20.87	$9.80	$1.57	$0.00	$32.24
3	70	$24.35	$9.80	$11.20	$0.00	$45.35
4	75	$26.09	$9.80	$11.20	$0.00	$47.09
5	80	$27.82	$9.80	$12.77	$0.00	$50.39
6	80	$27.82	$9.80	$12.77	$0.00	$50.39
7	90	$31.30	$9.80	$14.34	$0.00	$55.44
8	90	$31.30	$9.80	$14.34	$0.00	$55.44

Effective Date - 09/01/2014

Step	percent	Apprentice Base Wage	Health	Pension	Supplemental Unemployment	Total Rate
1	50	$17.78	$9.80	$1.57	$0.00	$29.15
2	60	$21.33	$9.80	$1.57	$0.00	$32.70
3	70	$24.89	$9.80	$11.20	$0.00	$45.89
4	75	$26.66	$9.80	$11.20	$0.00	$47.66
5	80	$28.44	$9.80	$12.77	$0.00	$51.01
6	80	$28.44	$9.80	$12.77	$0.00	$51.01
7	90	$32.00	$9.80	$14.34	$0.00	$56.14
8	90	$32.00	$9.80	$14.34	$0.00	$56.14

Notes:

Apprentice to Journeyworker Ratio:1:5

Classification	Effective Date	Base Wage	Health	Pension	Supplemental Unemployment	Total Rate
CEMENT MASONRY/PLASTERING *BRICKLAYERS LOCAL 3 (LOWELL)*	01/01/2014	$39.29	$10.90	$18.71	$1.30	$70.20
	07/01/2014	$40.12	$10.90	$18.71	$1.30	$71.03
	01/01/2015	$40.80	$10.90	$18.71	$1.30	$71.71
	07/01/2015	$41.63	$10.90	$18.71	$1.30	$72.54
	01/01/2016	$42.32	$10.90	$18.71	$1.30	$73.23

Apprentice - *CEMENT MASONRY/PLASTERING - Lowell*

Effective Date - 01/01/2014

Step	percent	Apprentice Base Wage	Health	Pension	Supplemental Unemployment	Total Rate
1	50	$19.65	$10.90	$12.21	$1.30	$44.06
2	60	$23.57	$10.90	$13.71	$1.30	$49.48
3	65	$25.54	$10.90	$14.71	$1.30	$52.45
4	70	$27.50	$10.90	$15.71	$1.30	$55.41
5	75	$29.47	$10.90	$16.71	$1.30	$58.38
6	80	$31.43	$10.90	$17.71	$1.30	$61.34
7	90	$35.36	$10.90	$18.71	$1.30	$66.27

Effective Date - 07/01/2014

Step	percent	Apprentice Base Wage	Health	Pension	Supplemental Unemployment	Total Rate
1	50	$20.06	$10.90	$12.21	$1.30	$44.47
2	60	$24.07	$10.90	$13.71	$1.30	$49.98
3	65	$26.08	$10.90	$14.71	$1.30	$52.99
4	70	$28.08	$10.90	$15.71	$1.30	$55.99
5	75	$30.09	$10.90	$16.71	$1.30	$59.00
6	80	$32.10	$10.90	$17.71	$1.30	$62.01
7	90	$36.11	$10.90	$18.71	$1.30	$67.02

Notes:

Steps 3,4 are 500 hrs. All other steps are 1,000 hrs.

Apprentice to Journeyworker Ratio:1:3

CHAIN SAW OPERATOR *LABORERS - ZONE 2*	06/01/2014	$30.60	$7.30	$12.10	$0.00	$50.00
	12/01/2014	$31.10	$7.30	$12.10	$0.00	$50.50
	06/01/2015	$31.60	$7.30	$12.10	$0.00	$51.00
	12/01/2015	$32.10	$7.30	$12.10	$0.00	$51.50
	06/01/2016	$32.60	$7.30	$12.10	$0.00	$52.00
	12/01/2016	$33.35	$7.30	$12.10	$0.00	$52.75

For apprentice rates see "Apprentice- LABORER"

CLAM SHELLS/SLURRY BUCKETS/HEADING MACHINES *OPERATING ENGINEERS LOCAL 4*	12/01/2013	$41.49	$10.00	$14.18	$0.00	$65.67

For apprentice rates see "Apprentice- OPERATING ENGINEERS"

COMPRESSOR OPERATOR *OPERATING ENGINEERS LOCAL 4*	12/01/2013	$28.11	$10.00	$14.18	$0.00	$52.29

For apprentice rates see "Apprentice- OPERATING ENGINEERS"

Classification	Effective Date	Base Wage	Health	Pension	Supplemental Unemployment	Total Rate
DELEADER (BRIDGE) *PAINTERS LOCAL 35 - ZONE 2*	01/01/2014	$45.91	$7.85	$16.10	$0.00	$69.86
	07/01/2014	$46.76	$7.85	$16.10	$0.00	$70.71
	01/01/2015	$47.66	$7.85	$16.10	$0.00	$71.61
	07/01/2015	$48.56	$7.85	$16.10	$0.00	$72.51
	01/01/2016	$49.51	$7.85	$16.10	$0.00	$73.46
	07/01/2016	$50.46	$7.85	$16.10	$0.00	$74.41
	01/01/2017	$51.41	$7.85	$16.10	$0.00	$75.36

Apprentice - *PAINTER Local 35 - BRIDGES/TANKS*

Effective Date - 01/01/2014

Step	percent	Apprentice Base Wage	Health	Pension	Supplemental Unemployment	Total Rate
1	50	$22.96	$7.85	$0.00	$0.00	$30.81
2	55	$25.25	$7.85	$3.66	$0.00	$36.76
3	60	$27.55	$7.85	$3.99	$0.00	$39.39
4	65	$29.84	$7.85	$4.32	$0.00	$42.01
5	70	$32.14	$7.85	$14.11	$0.00	$54.10
6	75	$34.43	$7.85	$14.44	$0.00	$56.72
7	80	$36.73	$7.85	$14.77	$0.00	$59.35
8	90	$41.32	$7.85	$15.44	$0.00	$64.61

Effective Date - 07/01/2014

Step	percent	Apprentice Base Wage	Health	Pension	Supplemental Unemployment	Total Rate
1	50	$23.38	$7.85	$0.00	$0.00	$31.23
2	55	$25.72	$7.85	$3.66	$0.00	$37.23
3	60	$28.06	$7.85	$3.99	$0.00	$39.90
4	65	$30.39	$7.85	$4.32	$0.00	$42.56
5	70	$32.73	$7.85	$14.11	$0.00	$54.69
6	75	$35.07	$7.85	$14.44	$0.00	$57.36
7	80	$37.41	$7.85	$14.77	$0.00	$60.03
8	90	$42.08	$7.85	$15.44	$0.00	$65.37

Notes:

Steps are 750 hrs.

Apprentice to Journeyworker Ratio:1:1

DEMO: ADZEMAN *LABORERS - ZONE 2*	06/01/2014	$34.25	$7.30	$12.70	$0.00	$54.25
	12/01/2014	$35.00	$7.30	$12.70	$0.00	$55.00
	06/01/2015	$35.75	$7.30	$12.70	$0.00	$55.75
	12/01/2015	$36.50	$7.30	$12.70	$0.00	$56.50

For apprentice rates see "Apprentice- LABORER"

DEMO: BACKHOE/LOADER/HAMMER OPERATOR *LABORERS - ZONE 2*	06/01/2014	$35.25	$7.30	$12.70	$0.00	$55.25
	12/01/2014	$36.00	$7.30	$12.70	$0.00	$56.00
	06/01/2015	$36.75	$7.30	$12.70	$0.00	$56.75
	12/01/2015	$37.50	$7.30	$12.70	$0.00	$57.50

For apprentice rates see "Apprentice- LABORER"

Classification	Effective Date	Base Wage	Health	Pension	Supplemental Unemployment	Total Rate
DEMO: BURNERS *LABORERS - ZONE 2*	06/01/2014	$35.00	$7.30	$12.70	$0.00	$55.00
	12/01/2014	$35.75	$7.30	$12.70	$0.00	$55.75
	06/01/2015	$36.50	$7.30	$12.70	$0.00	$56.50
	12/01/2015	$37.25	$7.30	$12.70	$0.00	$57.25
For apprentice rates see "Apprentice- LABORER"						
DEMO: CONCRETE CUTTER/SAWYER *LABORERS - ZONE 2*	06/01/2014	$35.25	$7.30	$12.70	$0.00	$55.25
	12/01/2014	$36.00	$7.30	$12.70	$0.00	$56.00
	06/01/2015	$36.75	$7.30	$12.70	$0.00	$56.75
	12/01/2015	$37.50	$7.30	$12.70	$0.00	$57.50
For apprentice rates see "Apprentice- LABORER"						
DEMO: JACKHAMMER OPERATOR *LABORERS - ZONE 2*	06/01/2014	$35.00	$7.30	$12.70	$0.00	$55.00
	12/01/2014	$35.75	$7.30	$12.70	$0.00	$55.75
	06/01/2015	$36.50	$7.30	$12.70	$0.00	$56.50
	12/01/2015	$37.25	$7.30	$12.70	$0.00	$57.25
For apprentice rates see "Apprentice- LABORER"						
DEMO: WRECKING LABORER *LABORERS - ZONE 2*	06/01/2014	$34.25	$7.30	$12.70	$0.00	$54.25
	12/01/2014	$35.00	$7.30	$12.70	$0.00	$55.00
	06/01/2015	$35.75	$7.30	$12.70	$0.00	$55.75
	12/01/2015	$36.50	$7.30	$12.70	$0.00	$56.50
For apprentice rates see "Apprentice- LABORER"						
DIRECTIONAL DRILL MACHINE OPERATOR *OPERATING ENGINEERS LOCAL 4*	12/01/2013	$40.11	$10.00	$14.18	$0.00	$64.29
For apprentice rates see "Apprentice- OPERATING ENGINEERS"						
DIVER *PILE DRIVER LOCAL 56 (ZONE 1)*	08/01/2013	$56.14	$9.80	$18.17	$0.00	$84.11
	08/01/2014	$58.24	$9.80	$18.17	$0.00	$86.21
	08/01/2015	$60.34	$9.80	$18.17	$0.00	$88.31
DIVER TENDER *PILE DRIVER LOCAL 56 (ZONE 1)*	08/01/2013	$40.10	$9.80	$18.17	$0.00	$68.07
	08/01/2014	$41.60	$9.80	$18.17	$0.00	$69.57
	08/01/2015	$43.10	$9.80	$18.17	$0.00	$71.07
DIVER TENDER (EFFLUENT) *PILE DRIVER LOCAL 56 (ZONE 1)*	08/01/2013	$60.15	$9.80	$18.17	$0.00	$88.12
	08/01/2014	$62.40	$9.80	$18.17	$0.00	$90.37
	08/01/2015	$64.65	$9.80	$18.17	$0.00	$92.62
DIVER/SLURRY (EFFLUENT) *PILE DRIVER LOCAL 56 (ZONE 1)*	08/01/2013	$84.21	$9.80	$18.17	$0.00	$112.18
	08/01/2014	$87.36	$9.80	$18.17	$0.00	$115.33
	08/01/2015	$90.51	$9.80	$18.17	$0.00	$118.48
ELECTRICIAN *ELECTRICIANS LOCAL 96*	06/01/2014	$38.12	$7.91	$12.86	$0.00	$58.89
	12/01/2014	$38.37	$8.16	$13.12	$0.00	$59.65
	06/01/2015	$38.87	$8.16	$13.62	$0.00	$60.65
	12/01/2015	$39.37	$8.41	$13.68	$0.00	$61.46

Classification	Effective Date	Base Wage	Health	Pension	Supplemental Unemployment	Total Rate

Apprentice - *ELECTRICIAN - Local 96*

Effective Date - 06/01/2014

Step	percent	Apprentice Base Wage	Health	Pension	Supplemental Unemployment	Total Rate
1	40	$15.25	$7.91	$0.46	$0.00	$23.62
2	43	$16.39	$7.91	$0.49	$0.00	$24.79
3	48	$18.30	$7.91	$10.09	$0.00	$36.30
4	55	$20.97	$7.91	$10.47	$0.00	$39.35
5	65	$24.78	$7.91	$11.00	$0.00	$43.69
6	80	$30.50	$7.91	$11.81	$0.00	$50.22

Effective Date - 12/01/2014

Step	percent	Apprentice Base Wage	Health	Pension	Supplemental Unemployment	Total Rate
1	40	$15.35	$8.16	$0.46	$0.00	$23.97
2	43	$16.50	$8.16	$0.50	$0.00	$25.16
3	48	$18.42	$8.16	$10.33	$0.00	$36.91
4	55	$21.10	$8.16	$10.70	$0.00	$39.96
5	65	$24.94	$8.16	$11.24	$0.00	$44.34
6	80	$30.70	$8.16	$12.05	$0.00	$50.91

Notes:

Steps 1-2 are 1000 hrs; Steps 3-6 are 1500 hrs.

Apprentice to Journeyworker Ratio:2:3***

ELEVATOR CONSTRUCTOR *ELEVATOR CONSTRUCTORS LOCAL 4*	01/01/2012	$52.45	$8.78	$6.96	$0.00	$68.19

Apprentice - *ELEVATOR CONSTRUCTOR - Local 4*

Effective Date - 01/01/2012

Step	percent	Apprentice Base Wage	Health	Pension	Supplemental Unemployment	Total Rate
1	50	$26.23	$8.78	$0.00	$0.00	$35.01
2	55	$28.85	$8.78	$6.96	$0.00	$44.59
3	65	$34.09	$8.78	$6.96	$0.00	$49.83
4	70	$36.72	$8.78	$6.96	$0.00	$52.46
5	80	$41.96	$8.78	$6.96	$0.00	$57.70

Notes:

Steps 1-2 are 6 mos.; Steps 3-5 are 1 year

Apprentice to Journeyworker Ratio:1:1

ELEVATOR CONSTRUCTOR HELPER *ELEVATOR CONSTRUCTORS LOCAL 4*	01/01/2012	$38.59	$8.78	$6.96	$0.00	$54.33

For apprentice rates see "Apprentice - ELEVATOR CONSTRUCTOR"

Classification	Effective Date	Base Wage	Health	Pension	Supplemental Unemployment	Total Rate
FENCE & GUARD RAIL ERECTOR *LABORERS - ZONE 2*	06/01/2014	$30.60	$7.30	$12.10	$0.00	$50.00
	12/01/2014	$31.10	$7.30	$12.10	$0.00	$50.50
	06/01/2015	$31.60	$7.30	$12.10	$0.00	$51.00
	12/01/2015	$32.10	$7.30	$12.10	$0.00	$51.50
	06/01/2016	$32.60	$7.30	$12.10	$0.00	$52.00
	12/01/2016	$33.35	$7.30	$12.10	$0.00	$52.75
For apprentice rates see "Apprentice- LABORER"						
FIELD ENG.INST.PERSON-BLDG,SITE,HVY/HWY *OPERATING ENGINEERS LOCAL 4*	05/01/2014	$38.87	$10.00	$14.18	$0.00	$63.05
For apprentice rates see "Apprentice- OPERATING ENGINEERS"						
FIELD ENG.PARTY CHIEF-BLDG,SITE,HVY/HWY *OPERATING ENGINEERS LOCAL 4*	05/01/2014	$40.29	$10.00	$14.18	$0.00	$64.47
For apprentice rates see "Apprentice- OPERATING ENGINEERS"						
FIELD ENG.ROD PERSON-BLDG,SITE,HVY/HWY *OPERATING ENGINEERS LOCAL 4*	05/01/2014	$20.92	$10.00	$14.18	$0.00	$45.10
For apprentice rates see "Apprentice- OPERATING ENGINEERS"						
FIRE ALARM INSTALLER *ELECTRICIANS LOCAL 96*	06/01/2014	$38.12	$7.91	$12.86	$0.00	$58.89
	12/01/2014	$38.37	$8.16	$13.12	$0.00	$59.65
	06/01/2015	$38.87	$8.16	$13.62	$0.00	$60.65
	12/01/2015	$39.37	$8.41	$13.68	$0.00	$61.46
For apprentice rates see "Apprentice- ELECTRICIAN"						
FIRE ALARM REPAIR / MAINT/COMMISSIONING *ELECTRICIANS LOCAL 96*	06/01/2014	$38.12	$7.91	$12.86	$0.00	$58.89
	12/01/2014	$38.37	$8.16	$13.12	$0.00	$59.65
	06/01/2015	$38.87	$8.16	$13.62	$0.00	$60.65
	12/01/2015	$39.37	$8.41	$13.68	$0.00	$61.46
For apprentice rates see "Apprentice- ELECTRICIAN"						
FIREMAN (ASST. ENGINEER) *OPERATING ENGINEERS LOCAL 4*	12/01/2013	$33.76	$10.00	$14.18	$0.00	$57.94
For apprentice rates see "Apprentice- OPERATING ENGINEERS"						
FLAGGER & SIGNALER *LABORERS - ZONE 2*	06/01/2014	$20.50	$7.30	$12.10	$0.00	$39.90
	12/01/2014	$20.50	$7.30	$12.10	$0.00	$39.90
	06/01/2015	$20.50	$7.30	$12.10	$0.00	$39.90
	12/01/2015	$20.50	$7.30	$12.10	$0.00	$39.90
	06/01/2016	$20.50	$7.30	$12.10	$0.00	$39.90
	12/01/2016	$20.50	$7.30	$12.10	$0.00	$39.90
For apprentice rates see "Apprentice- LABORER"						
FLOORCOVERER *FLOORCOVERERS LOCAL 2168 ZONE 1*	03/01/2014	$39.87	$9.80	$16.96	$0.00	$66.63

Classification	Effective Date	Base Wage	Health	Pension	Supplemental Unemployment	Total Rate

Apprentice - *FLOORCOVERER - Local 2168 Zone I*

Effective Date - 03/01/2014

Step	percent	Apprentice Base Wage	Health	Pension	Supplemental Unemployment	Total Rate
1	50	$19.94	$9.80	$1.79	$0.00	$31.53
2	55	$21.93	$9.80	$1.79	$0.00	$33.52
3	60	$23.92	$9.80	$11.59	$0.00	$45.31
4	65	$25.92	$9.80	$11.59	$0.00	$47.31
5	70	$27.91	$9.80	$13.38	$0.00	$51.09
6	75	$29.90	$9.80	$13.38	$0.00	$53.08
7	80	$31.90	$9.80	$15.17	$0.00	$56.87
8	85	$33.89	$9.80	$15.17	$0.00	$58.86

Notes:

Steps are 750 hrs.

Apprentice to Journeyworker Ratio:1:1

FORK LIFT/CHERRY PICKER *OPERATING ENGINEERS LOCAL 4*	12/01/2013	$40.49	$10.00	$14.18	$0.00	$64.67

For apprentice rates see "Apprentice- OPERATING ENGINEERS"

GENERATOR/LIGHTING PLANT/HEATERS *OPERATING ENGINEERS LOCAL 4*	12/01/2013	$28.11	$10.00	$14.18	$0.00	$52.29

For apprentice rates see "Apprentice- OPERATING ENGINEERS"

GLAZIER (GLASS PLANK/AIR BARRIER/INTERIOR SYSTEMS) *GLAZIERS LOCAL 35 (ZONE 2)*	01/01/2014	$35.41	$7.85	$16.10	$0.00	$59.36
	07/01/2014	$36.26	$7.85	$16.10	$0.00	$60.21
	01/01/2015	$37.16	$7.85	$16.10	$0.00	$61.11
	07/01/2015	$38.06	$7.85	$16.10	$0.00	$62.01
	01/01/2016	$39.01	$7.85	$16.10	$0.00	$62.96
	07/01/2016	$39.96	$7.85	$16.10	$0.00	$63.91
	01/01/2017	$40.91	$7.85	$16.10	$0.00	$64.86

Classification	Effective Date	Base Wage	Health	Pension	Supplemental Unemployment	Total Rate

Apprentice - *GLAZIER - Local 35 Zone 2*

Effective Date - 01/01/2014

Step	percent	Apprentice Base Wage	Health	Pension	Supplemental Unemployment	Total Rate
1	50	$17.71	$7.85	$0.00	$0.00	$25.56
2	55	$19.48	$7.85	$3.66	$0.00	$30.99
3	60	$21.25	$7.85	$3.99	$0.00	$33.09
4	65	$23.02	$7.85	$4.32	$0.00	$35.19
5	70	$24.79	$7.85	$14.11	$0.00	$46.75
6	75	$26.56	$7.85	$14.44	$0.00	$48.85
7	80	$28.33	$7.85	$14.77	$0.00	$50.95
8	90	$31.87	$7.85	$15.44	$0.00	$55.16

Effective Date - 07/01/2014

Step	percent	Apprentice Base Wage	Health	Pension	Supplemental Unemployment	Total Rate
1	50	$18.13	$7.85	$0.00	$0.00	$25.98
2	55	$19.94	$7.85	$3.66	$0.00	$31.45
3	60	$21.76	$7.85	$3.99	$0.00	$33.60
4	65	$23.57	$7.85	$4.32	$0.00	$35.74
5	70	$25.38	$7.85	$14.11	$0.00	$47.34
6	75	$27.20	$7.85	$14.44	$0.00	$49.49
7	80	$29.01	$7.85	$14.77	$0.00	$51.63
8	90	$32.63	$7.85	$15.44	$0.00	$55.92

Notes:

Steps are 750 hrs.

Apprentice to Journeyworker Ratio:1:1

HOISTING ENGINEER/CRANES/GRADALLS *OPERATING ENGINEERS LOCAL 4*	12/01/2013	$40.49	$10.00	$14.18	$0.00	$64.67

Classification	Effective Date	Base Wage	Health	Pension	Supplemental Unemployment	Total Rate

Apprentice - *OPERATING ENGINEERS - Local 4*

Effective Date - 12/01/2013

Step	percent	Apprentice Base Wage	Health	Pension	Supplemental Unemployment	Total Rate
1	55	$22.27	$10.00	$0.00	$0.00	$32.27
2	60	$24.29	$10.00	$14.18	$0.00	$48.47
3	65	$26.32	$10.00	$14.18	$0.00	$50.50
4	70	$28.34	$10.00	$14.18	$0.00	$52.52
5	75	$30.37	$10.00	$14.18	$0.00	$54.55
6	80	$32.39	$10.00	$14.18	$0.00	$56.57
7	85	$34.42	$10.00	$14.18	$0.00	$58.60
8	90	$36.44	$10.00	$14.18	$0.00	$60.62

Notes:

Apprentice to Journeyworker Ratio:1:6

HVAC (DUCTWORK) *SHEETMETAL WORKERS LOCAL 17 - A*	02/01/2014	$42.76	$9.82	$19.74	$2.17	$74.49
	08/01/2014	$43.61	$9.82	$19.74	$2.17	$75.34
	02/01/2015	$44.51	$9.82	$19.74	$2.17	$76.24
	08/01/2015	$45.51	$9.82	$19.74	$2.17	$77.24
	02/01/2016	$46.51	$9.82	$19.74	$2.17	$78.24
	08/01/2016	$47.66	$9.82	$19.74	$2.17	$79.39
	02/01/2017	$48.76	$9.82	$19.74	$2.17	$80.49
	08/01/2017	$49.86	$9.82	$19.74	$2.17	$81.59
	02/01/2018	$51.01	$9.82	$19.74	$2.17	$82.74
For apprentice rates see "Apprentice- SHEET METAL WORKER"						
HVAC (ELECTRICAL CONTROLS) *ELECTRICIANS LOCAL 96*	06/01/2014	$38.12	$7.91	$12.86	$0.00	$58.89
	12/01/2014	$38.37	$8.16	$13.12	$0.00	$59.65
	06/01/2015	$38.87	$8.16	$13.62	$0.00	$60.65
	12/01/2015	$39.37	$8.41	$13.68	$0.00	$61.46
For apprentice rates see "Apprentice- ELECTRICIAN"						
HVAC (TESTING AND BALANCING - AIR) *SHEETMETAL WORKERS LOCAL 17 - A*	02/01/2014	$42.76	$9.82	$19.74	$2.17	$74.49
	08/01/2014	$43.61	$9.82	$19.74	$2.17	$75.34
	02/01/2015	$44.51	$9.82	$19.74	$2.17	$76.24
	08/01/2015	$45.51	$9.82	$19.74	$2.17	$77.24
	02/01/2016	$46.51	$9.82	$19.74	$2.17	$78.24
	08/01/2016	$47.66	$9.82	$19.74	$2.17	$79.39
	02/01/2017	$48.76	$9.82	$19.74	$2.17	$80.49
	08/01/2017	$49.86	$9.82	$19.74	$2.17	$81.59
	02/01/2018	$51.01	$9.82	$19.74	$2.17	$82.74
For apprentice rates see "Apprentice- SHEET METAL WORKER"						
HVAC (TESTING AND BALANCING -WATER) *PIPEFITTERS LOCAL 537*	03/01/2013	$49.34	$8.75	$14.39	$0.00	$72.48
For apprentice rates see "Apprentice- PIPEFITTER" or "PLUMBER/PIPEFITTER"						
HVAC MECHANIC *PIPEFITTERS LOCAL 537*	03/01/2013	$49.34	$8.75	$14.39	$0.00	$72.48

Classification	Effective Date	Base Wage	Health	Pension	Supplemental Unemployment	Total Rate
For apprentice rates see "Apprentice- PIPEFITTER" or "PLUMBER/PIPEFITTER"						
HYDRAULIC DRILLS *LABORERS - ZONE 2*	06/01/2014	$31.10	$7.30	$12.10	$0.00	$50.50
	12/01/2014	$31.60	$7.30	$12.10	$0.00	$51.00
	06/01/2015	$32.10	$7.30	$12.10	$0.00	$51.50
	12/01/2015	$32.60	$7.30	$12.10	$0.00	$52.00
	06/01/2016	$33.10	$7.30	$12.10	$0.00	$52.50
	12/01/2016	$33.85	$7.30	$12.10	$0.00	$53.25
For apprentice rates see "Apprentice- LABORER"						
INSULATOR (PIPES & TANKS) *HEAT & FROST INSULATORS LOCAL 6 (BOSTON)*	09/01/2013	$42.11	$10.95	$12.10	$0.00	$65.16
	09/01/2014	$44.11	$10.95	$12.10	$0.00	$67.16

Apprentice - *ASBESTOS INSULATOR (Pipes & Tanks) - Local 6 Boston*

Effective Date - 09/01/2013

Step	percent	Apprentice Base Wage	Health	Pension	Supplemental Unemployment	Total Rate
1	50	$21.06	$10.95	$9.00	$0.00	$41.01
2	60	$25.27	$10.95	$9.62	$0.00	$45.84
3	70	$29.48	$10.95	$10.24	$0.00	$50.67
4	80	$33.69	$10.95	$10.86	$0.00	$55.50

Effective Date - 09/01/2014

Step	percent	Apprentice Base Wage	Health	Pension	Supplemental Unemployment	Total Rate
1	50	$22.06	$10.95	$9.00	$0.00	$42.01
2	60	$26.47	$10.95	$9.62	$0.00	$47.04
3	70	$30.88	$10.95	$10.24	$0.00	$52.07
4	80	$35.29	$10.95	$10.86	$0.00	$57.10

Notes:

Steps are 1 year

Apprentice to Journeyworker Ratio:1:4

IRONWORKER/WELDER *IRONWORKERS LOCAL 7 (WORCESTER AREA)*	03/16/2014	$40.89	$7.70	$19.25	$0.00	$67.84

Classification	Effective Date	Base Wage	Health	Pension	Supplemental Unemployment	Total Rate

Apprentice - *IRONWORKER - Local 7 Worcester*

Effective Date - 03/16/2014

Step	percent	Apprentice Base Wage	Health	Pension	Supplemental Unemployment	Total Rate
1	60	$24.53	$7.70	$19.25	$0.00	$51.48
2	70	$28.62	$7.70	$19.25	$0.00	$55.57
3	75	$30.67	$7.70	$19.25	$0.00	$57.62
4	80	$32.71	$7.70	$19.25	$0.00	$59.66
5	85	$34.76	$7.70	$19.25	$0.00	$61.71
6	90	$36.80	$7.70	$19.25	$0.00	$63.75

Notes:

Structural 1:6; Ornamental 1:4

Apprentice to Journeyworker Ratio:

JACKHAMMER & PAVING BREAKER OPERATOR *LABORERS - ZONE 2*	06/01/2014	$30.60	$7.30	$12.10	$0.00	$50.00
	12/01/2014	$31.10	$7.30	$12.10	$0.00	$50.50
	06/01/2015	$31.60	$7.30	$12.10	$0.00	$51.00
	12/01/2015	$32.10	$7.30	$12.10	$0.00	$51.50
	06/01/2016	$32.60	$7.30	$12.10	$0.00	$52.00
	12/01/2016	$33.35	$7.30	$12.10	$0.00	$52.75
For apprentice rates see "Apprentice- LABORER"						
LABORER *LABORERS - ZONE 2*	06/01/2014	$30.35	$7.30	$12.10	$0.00	$49.75
	12/01/2014	$30.85	$7.30	$12.10	$0.00	$50.25
	06/01/2015	$31.35	$7.30	$12.10	$0.00	$50.75
	12/01/2015	$31.85	$7.30	$12.10	$0.00	$51.25
	06/01/2016	$32.35	$7.30	$12.10	$0.00	$51.75
	12/01/2016	$33.10	$7.30	$12.10	$0.00	$52.50

Classification	Effective Date	Base Wage	Health	Pension	Supplemental Unemployment	Total Rate

Apprentice - *LABORER - Zone 2*

Effective Date - 06/01/2014

Step	percent	Apprentice Base Wage	Health	Pension	Supplemental Unemployment	Total Rate
1	60	$18.21	$7.30	$12.10	$0.00	$37.61
2	70	$21.25	$7.30	$12.10	$0.00	$40.65
3	80	$24.28	$7.30	$12.10	$0.00	$43.68
4	90	$27.32	$7.30	$12.10	$0.00	$46.72

Effective Date - 12/01/2014

Step	percent	Apprentice Base Wage	Health	Pension	Supplemental Unemployment	Total Rate
1	60	$18.51	$7.30	$12.10	$0.00	$37.91
2	70	$21.60	$7.30	$12.10	$0.00	$41.00
3	80	$24.68	$7.30	$12.10	$0.00	$44.08
4	90	$27.77	$7.30	$12.10	$0.00	$47.17

Notes:

Apprentice to Journeyworker Ratio:1:5

LABORER: CARPENTER TENDER *LABORERS - ZONE 2*	06/01/2014	$30.35	$7.30	$12.10	$0.00	$49.75
	12/01/2014	$30.85	$7.30	$12.10	$0.00	$50.25
	06/01/2015	$31.35	$7.30	$12.10	$0.00	$50.75
	12/01/2015	$31.85	$7.30	$12.10	$0.00	$51.25
	06/01/2016	$32.35	$7.30	$12.10	$0.00	$51.75
	12/01/2016	$33.10	$7.30	$12.10	$0.00	$52.50
For apprentice rates see "Apprentice- LABORER"						
LABORER: CEMENT FINISHER TENDER *LABORERS - ZONE 2*	06/01/2014	$30.35	$7.30	$12.10	$0.00	$49.75
	12/01/2014	$30.85	$7.30	$12.10	$0.00	$50.25
	06/01/2015	$31.35	$7.30	$12.10	$0.00	$50.75
	12/01/2015	$31.85	$7.30	$12.10	$0.00	$51.25
	06/01/2016	$32.35	$7.30	$12.10	$0.00	$51.75
	12/01/2016	$33.10	$7.30	$12.10	$0.00	$52.50
For apprentice rates see "Apprentice- LABORER"						
LABORER: HAZARDOUS WASTE/ASBESTOS REMOVER *LABORERS - ZONE 2*	06/01/2014	$30.55	$7.30	$12.05	$0.00	$49.90
	12/01/2014	$31.05	$7.30	$12.05	$0.00	$50.40
	06/01/2015	$31.55	$7.30	$12.05	$0.00	$50.90
	12/01/2015	$32.05	$7.30	$12.05	$0.00	$51.40
For apprentice rates see "Apprentice- LABORER"						
LABORER: MASON TENDER *LABORERS - ZONE 2*	06/01/2014	$30.60	$7.30	$12.10	$0.00	$50.00
	12/01/2014	$31.10	$7.30	$12.10	$0.00	$50.50
	06/01/2015	$31.60	$7.30	$12.10	$0.00	$51.00
	12/01/2015	$32.10	$7.30	$12.10	$0.00	$51.50
	06/01/2016	$32.60	$7.30	$12.10	$0.00	$52.00
	12/01/2016	$33.35	$7.30	$12.10	$0.00	$52.75
For apprentice rates see "Apprentice- LABORER"						

Classification	Effective Date	Base Wage	Health	Pension	Supplemental Unemployment	Total Rate
LABORER: MULTI-TRADE TENDER *LABORERS - ZONE 2*	06/01/2014	$30.35	$7.30	$12.10	$0.00	$49.75
	12/01/2014	$30.85	$7.30	$12.10	$0.00	$50.25
	06/01/2015	$31.35	$7.30	$12.10	$0.00	$50.75
	12/01/2015	$31.85	$7.30	$12.10	$0.00	$51.25
	06/01/2016	$32.35	$7.30	$12.10	$0.00	$51.75
	12/01/2016	$33.10	$7.30	$12.10	$0.00	$52.50
For apprentice rates see "Apprentice- LABORER"						
LABORER: TREE REMOVER *LABORERS - ZONE 2*	06/01/2014	$30.35	$7.30	$12.10	$0.00	$49.75
	12/01/2014	$30.85	$7.30	$12.10	$0.00	$50.25
	06/01/2015	$31.35	$7.30	$12.10	$0.00	$50.75
	12/01/2015	$31.85	$7.30	$12.10	$0.00	$51.25
	06/01/2016	$32.35	$7.30	$12.10	$0.00	$51.75
	12/01/2016	$33.10	$7.30	$12.10	$0.00	$52.50
This classification applies to all tree work associated with the removal of standing trees, and trimming and removal of branches and limbs when the work is not done for a utility company for the purpose of operation, maintenance or repair of utility company equipment. For apprentice rates see "Apprentice- LABORER"						
LASER BEAM OPERATOR *LABORERS - ZONE 2*	06/01/2014	$30.60	$7.30	$12.10	$0.00	$50.00
	12/01/2014	$31.10	$7.30	$12.10	$0.00	$50.50
	06/01/2015	$31.60	$7.30	$12.10	$0.00	$51.00
	12/01/2015	$32.10	$7.30	$12.10	$0.00	$51.50
	06/01/2016	$32.60	$7.30	$12.10	$0.00	$52.00
	12/01/2016	$33.35	$7.30	$12.10	$0.00	$52.75
For apprentice rates see "Apprentice- LABORER"						
MARBLE & TILE FINISHERS *BRICKLAYERS LOCAL 3 - MARBLE & TILE*	02/01/2014	$36.66	$10.18	$16.83	$0.00	$63.67
	08/01/2014	$37.37	$10.18	$16.90	$0.00	$64.45
	02/01/2015	$37.82	$10.18	$16.90	$0.00	$64.90
	08/01/2015	$38.53	$10.18	$16.97	$0.00	$65.68
	02/01/2016	$38.98	$10.18	$16.97	$0.00	$66.13
	08/01/2016	$39.68	$10.18	$17.05	$0.00	$66.91
	02/01/2017	$40.14	$10.18	$17.05	$0.00	$67.37

Classification	Effective Date	Base Wage	Health	Pension	Supplemental Unemployment	Total Rate

Apprentice - *MARBLE & TILE FINISHER - Local 3 Marble & Tile*

Effective Date - 02/01/2014

Step	percent	Apprentice Base Wage	Health	Pension	Supplemental Unemployment	Total Rate
1	50	$18.33	$10.18	$16.83	$0.00	$45.34
2	60	$22.00	$10.18	$16.83	$0.00	$49.01
3	70	$25.66	$10.18	$16.83	$0.00	$52.67
4	80	$29.33	$10.18	$16.83	$0.00	$56.34
5	90	$32.99	$10.18	$16.83	$0.00	$60.00

Effective Date - 08/01/2014

Step	percent	Apprentice Base Wage	Health	Pension	Supplemental Unemployment	Total Rate
1	50	$18.69	$10.18	$16.90	$0.00	$45.77
2	60	$22.42	$10.18	$16.90	$0.00	$49.50
3	70	$26.16	$10.18	$16.90	$0.00	$53.24
4	80	$29.90	$10.18	$16.90	$0.00	$56.98
5	90	$33.63	$10.18	$16.90	$0.00	$60.71

Notes:

Apprentice to Journeyworker Ratio:1:3

MARBLE MASONS,TILELAYERS & TERRAZZO MECH *BRICKLAYERS LOCAL 3 - MARBLE & TILE*	02/01/2014	$48.10	$10.18	$18.15	$0.00	$76.43
	08/01/2014	$49.00	$10.18	$18.22	$0.00	$77.40
	02/01/2015	$49.56	$10.18	$18.22	$0.00	$77.96
	08/01/2015	$50.46	$10.18	$18.29	$0.00	$78.93
	02/01/2016	$51.03	$10.18	$18.29	$0.00	$79.50
	08/01/2016	$51.93	$10.18	$18.37	$0.00	$80.48
	02/01/2017	$52.50	$10.18	$18.37	$0.00	$81.05

Classification	Effective Date	Base Wage	Health	Pension	Supplemental Unemployment	Total Rate

Apprentice - *MARBLE-TILE-TERRAZZO MECHANIC - Local 3 Marble & Tile*

Effective Date - 02/01/2014

Step	percent	Apprentice Base Wage	Health	Pension	Supplemental Unemployment	Total Rate
1	50	$24.05	$10.18	$18.15	$0.00	$52.38
2	60	$28.86	$10.18	$18.15	$0.00	$57.19
3	70	$33.67	$10.18	$18.15	$0.00	$62.00
4	80	$38.48	$10.18	$18.15	$0.00	$66.81
5	90	$43.29	$10.18	$18.15	$0.00	$71.62

Effective Date - 08/01/2014

Step	percent	Apprentice Base Wage	Health	Pension	Supplemental Unemployment	Total Rate
1	50	$24.50	$10.18	$18.22	$0.00	$52.90
2	60	$29.40	$10.18	$18.22	$0.00	$57.80
3	70	$34.30	$10.18	$18.22	$0.00	$62.70
4	80	$39.20	$10.18	$18.22	$0.00	$67.60
5	90	$44.10	$10.18	$18.22	$0.00	$72.50

Notes:

Apprentice to Journeyworker Ratio:1:5

MECH. SWEEPER OPERATOR (ON CONST. SITES) *OPERATING ENGINEERS LOCAL 4*	12/01/2013	$40.11	$10.00	$14.18	$0.00	$64.29
For apprentice rates see "Apprentice- OPERATING ENGINEERS"						
MECHANICS MAINTENANCE *OPERATING ENGINEERS LOCAL 4*	12/01/2013	$40.11	$10.00	$14.18	$0.00	$64.29
For apprentice rates see "Apprentice- OPERATING ENGINEERS"						
MILLWRIGHT (Zone 2) *MILLWRIGHTS LOCAL 1121 - Zone 2*	04/01/2014	$33.16	$9.80	$16.21	$0.00	$59.17
	10/01/2014	$33.92	$9.80	$16.21	$0.00	$59.93
	04/01/2015	$34.69	$9.80	$16.21	$0.00	$60.70

Classification	Effective Date	Base Wage	Health	Pension	Supplemental Unemployment	Total Rate

Apprentice - *MILLWRIGHT - Local 1121 Zone 2*

Effective Date - 04/01/2014

Step	percent	Apprentice Base Wage	Health	Pension	Supplemental Unemployment	Total Rate
1	55	$18.24	$9.80	$4.48	$0.00	$32.52
2	65	$21.55	$9.80	$13.36	$0.00	$44.71
3	75	$24.87	$9.80	$14.18	$0.00	$48.85
4	85	$28.19	$9.80	$14.99	$0.00	$52.98

Effective Date - 10/01/2014

Step	percent	Apprentice Base Wage	Health	Pension	Supplemental Unemployment	Total Rate
1	55	$18.66	$9.80	$4.48	$0.00	$32.94
2	65	$22.05	$9.80	$13.36	$0.00	$45.21
3	75	$25.44	$9.80	$14.18	$0.00	$49.42
4	85	$28.83	$9.80	$14.99	$0.00	$53.62

Notes:

Steps are 2,000 hours

Apprentice to Journeyworker Ratio:1:5

MORTAR MIXER *LABORERS - ZONE 2*	06/01/2014	$30.60	$7.30	$12.10	$0.00	$50.00
	12/01/2014	$31.10	$7.30	$12.10	$0.00	$50.50
	06/01/2015	$31.60	$7.30	$12.10	$0.00	$51.00
	12/01/2015	$32.10	$7.30	$12.10	$0.00	$51.50
	06/01/2016	$32.60	$7.30	$12.10	$0.00	$52.00
	12/01/2016	$33.35	$7.30	$12.10	$0.00	$52.75
For apprentice rates see "Apprentice- LABORER"						
OILER (OTHER THAN TRUCK CRANES,GRADALLS) *OPERATING ENGINEERS LOCAL 4*	12/01/2013	$20.96	$10.00	$14.18	$0.00	$45.14
For apprentice rates see "Apprentice- OPERATING ENGINEERS"						
OILER (TRUCK CRANES, GRADALLS) *OPERATING ENGINEERS LOCAL 4*	12/01/2013	$24.43	$10.00	$14.18	$0.00	$48.61
For apprentice rates see "Apprentice- OPERATING ENGINEERS"						
OTHER POWER DRIVEN EQUIPMENT - CLASS II *OPERATING ENGINEERS LOCAL 4*	12/01/2013	$40.11	$10.00	$14.18	$0.00	$64.29
For apprentice rates see "Apprentice- OPERATING ENGINEERS"						
PAINTER (BRIDGES/TANKS) *PAINTERS LOCAL 35 - ZONE 2*	01/01/2014	$45.91	$7.85	$16.10	$0.00	$69.86
	07/01/2014	$46.76	$7.85	$16.10	$0.00	$70.71
	01/01/2015	$47.66	$7.85	$16.10	$0.00	$71.61
	07/01/2015	$48.56	$7.85	$16.10	$0.00	$72.51
	01/01/2016	$49.51	$7.85	$16.10	$0.00	$73.46
	07/01/2016	$50.46	$7.85	$16.10	$0.00	$74.41
	01/01/2017	$51.41	$7.85	$16.10	$0.00	$75.36

Classification	Effective Date	Base Wage	Health	Pension	Supplemental Unemployment	Total Rate

Apprentice - *PAINTER Local 35 - BRIDGES/TANKS*

Effective Date - 01/01/2014

Step	percent	Apprentice Base Wage	Health	Pension	Supplemental Unemployment	Total Rate
1	50	$22.96	$7.85	$0.00	$0.00	$30.81
2	55	$25.25	$7.85	$3.66	$0.00	$36.76
3	60	$27.55	$7.85	$3.99	$0.00	$39.39
4	65	$29.84	$7.85	$4.32	$0.00	$42.01
5	70	$32.14	$7.85	$14.11	$0.00	$54.10
6	75	$34.43	$7.85	$14.44	$0.00	$56.72
7	80	$36.73	$7.85	$14.77	$0.00	$59.35
8	90	$41.32	$7.85	$15.44	$0.00	$64.61

Effective Date - 07/01/2014

Step	percent	Apprentice Base Wage	Health	Pension	Supplemental Unemployment	Total Rate
1	50	$23.38	$7.85	$0.00	$0.00	$31.23
2	55	$25.72	$7.85	$3.66	$0.00	$37.23
3	60	$28.06	$7.85	$3.99	$0.00	$39.90
4	65	$30.39	$7.85	$4.32	$0.00	$42.56
5	70	$32.73	$7.85	$14.11	$0.00	$54.69
6	75	$35.07	$7.85	$14.44	$0.00	$57.36
7	80	$37.41	$7.85	$14.77	$0.00	$60.03
8	90	$42.08	$7.85	$15.44	$0.00	$65.37

Notes:

Steps are 750 hrs.

Apprentice to Journeyworker Ratio:1:1

PAINTER (SPRAY OR SANDBLAST, NEW) *	01/01/2014	$36.81	$7.85	$16.10	$0.00	$60.76
* If 30% or more of surfaces to be painted are new construction, NEW paint rate shall be used.*PAINTERS LOCAL 35 - ZONE 2*	07/01/2014	$37.66	$7.85	$16.10	$0.00	$61.61
	01/01/2015	$38.56	$7.85	$16.10	$0.00	$62.51
	07/01/2015	$39.46	$7.85	$16.10	$0.00	$63.41
	01/01/2016	$40.41	$7.85	$16.10	$0.00	$64.36
	07/01/2016	$41.36	$7.85	$16.10	$0.00	$65.31
	01/01/2017	$42.31	$7.85	$16.10	$0.00	$66.26

Classification	Effective Date	Base Wage	Health	Pension	Supplemental Unemployment	Total Rate

Apprentice - *PAINTER Local 35 Zone 2 - Spray/Sandblast - New*

Effective Date - 01/01/2014

Step	percent	Apprentice Base Wage	Health	Pension	Supplemental Unemployment	Total Rate
1	50	$18.41	$7.85	$0.00	$0.00	$26.26
2	55	$20.25	$7.85	$3.66	$0.00	$31.76
3	60	$22.09	$7.85	$3.99	$0.00	$33.93
4	65	$23.93	$7.85	$4.32	$0.00	$36.10
5	70	$25.77	$7.85	$14.11	$0.00	$47.73
6	75	$27.61	$7.85	$14.44	$0.00	$49.90
7	80	$29.45	$7.85	$14.77	$0.00	$52.07
8	90	$33.13	$7.85	$15.44	$0.00	$56.42

Effective Date - 07/01/2014

Step	percent	Apprentice Base Wage	Health	Pension	Supplemental Unemployment	Total Rate
1	50	$18.83	$7.85	$0.00	$0.00	$26.68
2	55	$20.71	$7.85	$3.66	$0.00	$32.22
3	60	$22.60	$7.85	$3.99	$0.00	$34.44
4	65	$24.48	$7.85	$4.32	$0.00	$36.65
5	70	$26.36	$7.85	$14.11	$0.00	$48.32
6	75	$28.25	$7.85	$14.44	$0.00	$50.54
7	80	$30.13	$7.85	$14.77	$0.00	$52.75
8	90	$33.89	$7.85	$15.44	$0.00	$57.18

Notes:

Steps are 750 hrs.

Apprentice to Journeyworker Ratio:1:1

PAINTER (SPRAY OR SANDBLAST, REPAINT) *PAINTERS LOCAL 35 - ZONE 2*	01/01/2014	$34.87	$7.85	$16.10	$0.00	$58.82
	07/01/2014	$35.72	$7.85	$16.10	$0.00	$59.67
	01/01/2015	$36.62	$7.85	$16.10	$0.00	$60.57
	07/01/2015	$37.52	$7.85	$16.10	$0.00	$61.47
	01/01/2016	$38.47	$7.85	$16.10	$0.00	$62.42
	07/01/2016	$39.42	$7.85	$16.10	$0.00	$63.37
	01/01/2017	$40.37	$7.85	$16.10	$0.00	$64.32

Classification	Effective Date	Base Wage	Health	Pension	Supplemental Unemployment	Total Rate

Apprentice - *PAINTER Local 35 Zone 2 - Spray/Sandblast - Repaint*

Effective Date - 01/01/2014

Step	percent	Apprentice Base Wage	Health	Pension	Supplemental Unemployment	Total Rate
1	50	$17.44	$7.85	$0.00	$0.00	$25.29
2	55	$19.18	$7.85	$3.66	$0.00	$30.69
3	60	$20.92	$7.85	$3.99	$0.00	$32.76
4	65	$22.67	$7.85	$4.32	$0.00	$34.84
5	70	$24.41	$7.85	$14.11	$0.00	$46.37
6	75	$26.15	$7.85	$14.44	$0.00	$48.44
7	80	$27.90	$7.85	$14.77	$0.00	$50.52
8	90	$31.38	$7.85	$15.44	$0.00	$54.67

Effective Date - 07/01/2014

Step	percent	Apprentice Base Wage	Health	Pension	Supplemental Unemployment	Total Rate
1	50	$17.86	$7.85	$0.00	$0.00	$25.71
2	55	$19.65	$7.85	$3.66	$0.00	$31.16
3	60	$21.43	$7.85	$3.99	$0.00	$33.27
4	65	$23.22	$7.85	$4.32	$0.00	$35.39
5	70	$25.00	$7.85	$14.11	$0.00	$46.96
6	75	$26.79	$7.85	$14.44	$0.00	$49.08
7	80	$28.58	$7.85	$14.77	$0.00	$51.20
8	90	$32.15	$7.85	$15.44	$0.00	$55.44

Notes:

Steps are 750 hrs.

Apprentice to Journeyworker Ratio:1:1

PAINTER (TRAFFIC MARKINGS) *LABORERS - ZONE 2*	06/01/2014	$30.35	$7.30	$12.10	$0.00	$49.75
	12/01/2014	$30.85	$7.30	$12.10	$0.00	$50.25
	06/01/2015	$31.35	$7.30	$12.10	$0.00	$50.75
	12/01/2015	$31.85	$7.30	$12.10	$0.00	$51.25
	06/01/2016	$32.35	$7.30	$12.10	$0.00	$51.75
	12/01/2016	$33.10	$7.30	$12.10	$0.00	$52.50
For Apprentice rates see "Apprentice- LABORER"						
PAINTER / TAPER (BRUSH, NEW) * * If 30% or more of surfaces to be painted are new construction, NEW paint rate shall be used.*PAINTERS LOCAL 35 - ZONE 2*	01/01/2014	$35.41	$7.85	$16.10	$0.00	$59.36
	07/01/2014	$36.26	$7.85	$16.10	$0.00	$60.21
	01/01/2015	$37.16	$7.85	$16.10	$0.00	$61.11
	07/01/2015	$38.06	$7.85	$16.10	$0.00	$62.01
	01/01/2016	$39.01	$7.85	$16.10	$0.00	$62.96
	07/01/2016	$39.96	$7.85	$16.10	$0.00	$63.91
	01/01/2017	$40.91	$7.85	$16.10	$0.00	$64.86

Classification	Effective Date	Base Wage	Health	Pension	Supplemental Unemployment	Total Rate

Apprentice - *PAINTER - Local 35 Zone 2 - BRUSH NEW*

Effective Date - 01/01/2014

Step	percent	Apprentice Base Wage	Health	Pension	Supplemental Unemployment	Total Rate
1	50	$17.71	$7.85	$0.00	$0.00	$25.56
2	55	$19.48	$7.85	$3.66	$0.00	$30.99
3	60	$21.25	$7.85	$3.99	$0.00	$33.09
4	65	$23.02	$7.85	$4.32	$0.00	$35.19
5	70	$24.79	$7.85	$14.11	$0.00	$46.75
6	75	$26.56	$7.85	$14.44	$0.00	$48.85
7	80	$28.33	$7.85	$14.77	$0.00	$50.95
8	90	$31.87	$7.85	$15.44	$0.00	$55.16

Effective Date - 07/01/2014

Step	percent	Apprentice Base Wage	Health	Pension	Supplemental Unemployment	Total Rate
1	50	$18.13	$7.85	$0.00	$0.00	$25.98
2	55	$19.94	$7.85	$3.66	$0.00	$31.45
3	60	$21.76	$7.85	$3.99	$0.00	$33.60
4	65	$23.57	$7.85	$4.32	$0.00	$35.74
5	70	$25.38	$7.85	$14.11	$0.00	$47.34
6	75	$27.20	$7.85	$14.44	$0.00	$49.49
7	80	$29.01	$7.85	$14.77	$0.00	$51.63
8	90	$32.63	$7.85	$15.44	$0.00	$55.92

Notes:

Steps are 750 hrs.

Apprentice to Journeyworker Ratio:1:1

PAINTER / TAPER (BRUSH, REPAINT) *PAINTERS LOCAL 35 - ZONE 2*	01/01/2014	$33.47	$7.85	$16.10	$0.00	$57.42
	07/01/2014	$34.32	$7.85	$16.10	$0.00	$58.27
	01/01/2015	$35.22	$7.85	$16.10	$0.00	$59.17
	07/01/2015	$36.12	$7.85	$16.10	$0.00	$60.07
	01/01/2016	$37.07	$7.85	$16.10	$0.00	$61.02
	07/01/2016	$38.02	$7.85	$16.10	$0.00	$61.97
	01/01/2017	$38.97	$7.85	$16.10	$0.00	$62.92

Classification	Effective Date	Base Wage	Health	Pension	Supplemental Unemployment	Total Rate

Apprentice - *PAINTER Local 35 Zone 2 - BRUSH REPAINT*

Effective Date - 01/01/2014

Step	percent	Apprentice Base Wage	Health	Pension	Supplemental Unemployment	Total Rate
1	50	$16.74	$7.85	$0.00	$0.00	$24.59
2	55	$18.41	$7.85	$3.66	$0.00	$29.92
3	60	$20.08	$7.85	$3.99	$0.00	$31.92
4	65	$21.76	$7.85	$4.32	$0.00	$33.93
5	70	$23.43	$7.85	$14.11	$0.00	$45.39
6	75	$25.10	$7.85	$14.44	$0.00	$47.39
7	80	$26.78	$7.85	$14.77	$0.00	$49.40
8	90	$30.12	$7.85	$15.44	$0.00	$53.41

Effective Date - 07/01/2014

Step	percent	Apprentice Base Wage	Health	Pension	Supplemental Unemployment	Total Rate
1	50	$17.16	$7.85	$0.00	$0.00	$25.01
2	55	$18.88	$7.85	$3.66	$0.00	$30.39
3	60	$20.59	$7.85	$3.99	$0.00	$32.43
4	65	$22.31	$7.85	$4.32	$0.00	$34.48
5	70	$24.02	$7.85	$14.11	$0.00	$45.98
6	75	$25.74	$7.85	$14.44	$0.00	$48.03
7	80	$27.46	$7.85	$14.77	$0.00	$50.08
8	90	$30.89	$7.85	$15.44	$0.00	$54.18

Notes:

Steps are 750 hrs.

Apprentice to Journeyworker Ratio:1:1

PANEL & PICKUP TRUCKS DRIVER *TEAMSTERS JOINT COUNCIL NO. 10 ZONE B*	12/01/2012	$30.28	$9.07	$8.00	$0.00	$47.35
PIER AND DOCK CONSTRUCTOR (UNDERPINNING AND DECK) *PILE DRIVER LOCAL 56 (ZONE 1)*	08/01/2013	$40.10	$9.80	$18.17	$0.00	$68.07
	08/01/2014	$41.60	$9.80	$18.17	$0.00	$69.57
	08/01/2015	$43.10	$9.80	$18.17	$0.00	$71.07
PILE DRIVER *PILE DRIVER LOCAL 56 (ZONE 1)*	08/01/2013	$40.10	$9.80	$18.17	$0.00	$68.07
	08/01/2014	$41.60	$9.80	$18.17	$0.00	$69.57
	08/01/2015	$43.10	$9.80	$18.17	$0.00	$71.07

Classification	Effective Date	Base Wage	Health	Pension	Supplemental Unemployment	Total Rate

Apprentice - *PILE DRIVER - Local 56 Zone 1*

Effective Date - 08/01/2013

Step	percent	Apprentice Base Wage	Health	Pension	Supplemental Unemployment	Total Rate
1	50	$20.05	$9.80	$18.17	$0.00	$48.02
2	60	$24.06	$9.80	$18.17	$0.00	$52.03
3	70	$28.07	$9.80	$18.17	$0.00	$56.04
4	75	$30.08	$9.80	$18.17	$0.00	$58.05
5	80	$32.08	$9.80	$18.17	$0.00	$60.05
6	80	$32.08	$9.80	$18.17	$0.00	$60.05
7	90	$36.09	$9.80	$18.17	$0.00	$64.06
8	90	$36.09	$9.80	$18.17	$0.00	$64.06

Effective Date - 08/01/2014

Step	percent	Apprentice Base Wage	Health	Pension	Supplemental Unemployment	Total Rate
1	50	$20.80	$9.80	$18.17	$0.00	$48.77
2	60	$24.96	$9.80	$18.17	$0.00	$52.93
3	70	$29.12	$9.80	$18.17	$0.00	$57.09
4	75	$31.20	$9.80	$18.17	$0.00	$59.17
5	80	$33.28	$9.80	$18.17	$0.00	$61.25
6	80	$33.28	$9.80	$18.17	$0.00	$61.25
7	90	$37.44	$9.80	$18.17	$0.00	$65.41
8	90	$37.44	$9.80	$18.17	$0.00	$65.41

Notes:

Apprentice to Journeyworker Ratio:1:3

PIPEFITTER & STEAMFITTER *PIPEFITTERS LOCAL 537*	03/01/2013	$49.34	$8.75	$14.39	$0.00	$72.48

Apprentice - *PIPEFITTER - Local 537*

Effective Date - 03/01/2013

Step	percent	Apprentice Base Wage	Health	Pension	Supplemental Unemployment	Total Rate
1	40	$19.74	$8.75	$6.50	$0.00	$34.99
2	45	$22.20	$8.75	$14.39	$0.00	$45.34
3	60	$29.60	$8.75	$14.39	$0.00	$52.74
4	70	$34.54	$8.75	$14.39	$0.00	$57.68
5	80	$39.47	$8.75	$14.39	$0.00	$62.61

Notes:

** 1:3; 3:15; 1:10 thereafter / Steps are 1 yr.
Refrig/AC Mechanic **1:1;1:2;2:4;3:6;4:8;5:10;6:12;7:14;8:17;9:20;10:23(Max)

Apprentice to Journeyworker Ratio:**

Classification	Effective Date	Base Wage	Health	Pension	Supplemental Unemployment	Total Rate
PIPELAYER *LABORERS - ZONE 2*	06/01/2014	$30.60	$7.30	$12.10	$0.00	$50.00
	12/01/2014	$31.10	$7.30	$12.10	$0.00	$50.50
	06/01/2015	$31.60	$7.30	$12.10	$0.00	$51.00
	12/01/2015	$32.10	$7.30	$12.10	$0.00	$51.50
	06/01/2016	$32.60	$7.30	$12.10	$0.00	$52.00
	12/01/2016	$33.35	$7.30	$12.10	$0.00	$52.75
For apprentice rates see "Apprentice- LABORER"						
PLUMBERS & GASFITTERS *PLUMBERS & GASFITTERS LOCAL 12*	03/01/2014	$49.41	$9.82	$14.29	$0.00	$73.52
	09/01/2014	$50.41	$9.82	$14.29	$0.00	$74.52
	03/01/2015	$51.41	$9.82	$14.29	$0.00	$75.52
	09/01/2015	$52.41	$9.82	$14.29	$0.00	$76.52
	03/01/2016	$53.56	$9.82	$14.29	$0.00	$77.67
	09/01/2016	$54.61	$9.82	$14.29	$0.00	$78.72
	03/01/2017	$55.61	$9.82	$14.29	$0.00	$79.72

Apprentice - *PLUMBER/GASFITTER - Local 12*

Effective Date - 03/01/2014

Step	percent	Apprentice Base Wage	Health	Pension	Supplemental Unemployment	Total Rate
1	35	$17.29	$9.82	$5.33	$0.00	$32.44
2	40	$19.76	$9.82	$6.02	$0.00	$35.60
3	55	$27.18	$9.82	$8.08	$0.00	$45.08
4	65	$32.12	$9.82	$9.47	$0.00	$51.41
5	75	$37.06	$9.82	$10.85	$0.00	$57.73

Effective Date - 09/01/2014

Step	percent	Apprentice Base Wage	Health	Pension	Supplemental Unemployment	Total Rate
1	35	$17.64	$9.82	$5.33	$0.00	$32.79
2	40	$20.16	$9.82	$6.02	$0.00	$36.00
3	55	$27.73	$9.82	$8.08	$0.00	$45.63
4	65	$32.77	$9.82	$9.47	$0.00	$52.06
5	75	$37.81	$9.82	$10.85	$0.00	$58.48

Notes:

** 1:2; 2:6; 3:10; 4:14; 5:19/Steps are 1 yr
Step4 with lic$54.58 Step5 with lic$60.90

Apprentice to Journeyworker Ratio:**

PNEUMATIC CONTROLS (TEMP.) *PIPEFITTERS LOCAL 537*	03/01/2013	$49.34	$8.75	$14.39	$0.00	$72.48
For apprentice rates see "Apprentice- PIPEFITTER" or "PLUMBER/PIPEFITTER"						
PNEUMATIC DRILL/TOOL OPERATOR *LABORERS - ZONE 2*	06/01/2014	$30.60	$7.30	$12.10	$0.00	$50.00
	12/01/2014	$31.10	$7.30	$12.10	$0.00	$50.50
	06/01/2015	$31.60	$7.30	$12.10	$0.00	$51.00
	12/01/2015	$32.10	$7.30	$12.10	$0.00	$51.50
	06/01/2016	$32.60	$7.30	$12.10	$0.00	$52.00
	12/01/2016	$33.35	$7.30	$12.10	$0.00	$52.75
For apprentice rates see "Apprentice- LABORER"						

Classification	Effective Date	Base Wage	Health	Pension	Supplemental Unemployment	Total Rate
POWDERMAN & BLASTER *LABORERS - ZONE 2*	06/01/2014	$31.35	$7.30	$12.10	$0.00	$50.75
	12/01/2014	$31.85	$7.30	$12.10	$0.00	$51.25
	06/01/2015	$32.35	$7.30	$12.10	$0.00	$51.75
	12/01/2015	$32.85	$7.30	$12.10	$0.00	$52.25
	06/01/2016	$33.35	$7.30	$12.10	$0.00	$52.75
	12/01/2016	$34.10	$7.30	$12.10	$0.00	$53.50
For apprentice rates see "Apprentice- LABORER"						
POWER SHOVEL/DERRICK/TRENCHING MACHINE *OPERATING ENGINEERS LOCAL 4*	12/01/2013	$40.49	$10.00	$14.18	$0.00	$64.67
For apprentice rates see "Apprentice- OPERATING ENGINEERS"						
PUMP OPERATOR (CONCRETE) *OPERATING ENGINEERS LOCAL 4*	12/01/2013	$40.49	$10.00	$14.18	$0.00	$64.67
For apprentice rates see "Apprentice- OPERATING ENGINEERS"						
PUMP OPERATOR (DEWATERING, OTHER) *OPERATING ENGINEERS LOCAL 4*	12/01/2013	$28.11	$10.00	$14.18	$0.00	$52.29
For apprentice rates see "Apprentice- OPERATING ENGINEERS"						
READY-MIX CONCRETE DRIVER *TEAMSTERS LOCAL 170*	05/01/2010	$22.04	$6.50	$5.44	$0.00	$33.98
RECLAIMERS *OPERATING ENGINEERS LOCAL 4*	12/01/2013	$40.11	$10.00	$14.18	$0.00	$64.29
For apprentice rates see "Apprentice- OPERATING ENGINEERS"						
RESIDENTIAL WOOD FRAME (All Other Work) *CARPENTERS -ZONE 2 (Residential Wood)*	04/01/2011	$24.24	$8.67	$15.51	$0.00	$48.42
RESIDENTIAL WOOD FRAME CARPENTER ** ** The Residential Wood Frame Carpenter classification applies only to the construction of new, wood frame residences that do not exceed four stories including the basement.*CARPENTERS -ZONE 2 (Residential Wood)*	05/01/2011	$24.24	$6.34	$6.23	$0.00	$36.81

As of 9/1/09 Carpentry work on wood-frame residential WEATHERIZATION projects shall be paid the RESIDENTIAL WOOD FRAME CARPENTER rate.

Apprentice - *CARPENTER (Residential Wood Frame) - Zone 2*

Effective Date - 05/01/2011

Step	percent	Apprentice Base Wage	Health	Pension	Supplemental Unemployment	Total Rate
1	60	$14.54	$6.34	$0.00	$0.00	$20.88
2	60	$14.54	$6.34	$6.23	$0.00	$27.11
3	65	$15.76	$6.34	$6.23	$0.00	$28.33
4	70	$16.97	$6.34	$6.23	$0.00	$29.54
5	75	$18.18	$6.34	$6.23	$0.00	$30.75
6	80	$19.39	$6.34	$6.23	$0.00	$31.96
7	85	$20.60	$6.34	$6.23	$0.00	$33.17
8	90	$21.82	$6.34	$6.23	$0.00	$34.39

Notes:

Apprentice to Journeyworker Ratio:1:5

Classification	Effective Date	Base Wage	Health	Pension	Supplemental Unemployment	Total Rate
RIDE-ON MOTORIZED BUGGY OPERATOR *LABORERS - ZONE 2*	06/01/2014	$30.60	$7.30	$12.10	$0.00	$50.00
	12/01/2014	$31.10	$7.30	$12.10	$0.00	$50.50
	06/01/2015	$31.60	$7.30	$12.10	$0.00	$51.00
	12/01/2015	$32.10	$7.30	$12.10	$0.00	$51.50
	06/01/2016	$32.60	$7.30	$12.10	$0.00	$52.00
	12/01/2016	$33.35	$7.30	$12.10	$0.00	$52.75
For apprentice rates see "Apprentice- LABORER"						
ROLLER/SPREADER/MULCHING MACHINE *OPERATING ENGINEERS LOCAL 4*	12/01/2013	$40.11	$10.00	$14.18	$0.00	$64.29
For apprentice rates see "Apprentice- OPERATING ENGINEERS"						
ROOFER (Inc.Roofer Waterproofng &Roofer Damproofg) *ROOFERS LOCAL 33*	02/01/2014	$39.21	$10.50	$10.70	$0.00	$60.41
	08/01/2014	$40.11	$10.50	$10.70	$0.00	$61.31
	02/01/2015	$41.01	$10.50	$10.70	$0.00	$62.21
	08/01/2015	$41.91	$10.50	$10.70	$0.00	$63.11
	02/01/2016	$42.81	$10.50	$10.70	$0.00	$64.01

Apprentice - *ROOFER - Local 33*

Effective Date - 02/01/2014

Step	percent	Apprentice Base Wage	Health	Pension	Supplemental Unemployment	Total Rate
1	50	$19.61	$10.50	$3.38	$0.00	$33.49
2	60	$23.53	$10.50	$10.70	$0.00	$44.73
3	65	$25.49	$10.50	$10.70	$0.00	$46.69
4	75	$29.41	$10.50	$10.70	$0.00	$50.61
5	85	$33.33	$10.50	$10.70	$0.00	$54.53

Effective Date - 08/01/2014

Step	percent	Apprentice Base Wage	Health	Pension	Supplemental Unemployment	Total Rate
1	50	$20.06	$10.50	$3.38	$0.00	$33.94
2	60	$24.07	$10.50	$10.70	$0.00	$45.27
3	65	$26.07	$10.50	$10.70	$0.00	$47.27
4	75	$30.08	$10.50	$10.70	$0.00	$51.28
5	85	$34.09	$10.50	$10.70	$0.00	$55.29

Notes: ** 1:5, 2:6-10, the 1:10; Reroofing: 1:4, then 1:1
Step 1 is 2000 hrs.; Steps 2-5 are 1000 hrs.

Apprentice to Journeyworker Ratio:**

ROOFER SLATE / TILE / PRECAST CONCRETE *ROOFERS LOCAL 33*	02/01/2014	$39.46	$10.50	$10.70	$0.00	$60.66
	08/01/2014	$40.36	$10.50	$10.70	$0.00	$61.56
	02/01/2015	$41.26	$10.50	$10.70	$0.00	$62.46
	08/01/2015	$42.16	$10.50	$10.70	$0.00	$63.36
	02/01/2016	$43.06	$10.50	$10.70	$0.00	$64.26
For apprentice rates see "Apprentice- ROOFER"						

Classification	Effective Date	Base Wage	Health	Pension	Supplemental Unemployment	Total Rate
SHEETMETAL WORKER *SHEETMETAL WORKERS LOCAL 17 - A*	02/01/2014	$42.76	$9.82	$19.74	$2.17	$74.49
	08/01/2014	$43.61	$9.82	$19.74	$2.17	$75.34
	02/01/2015	$44.51	$9.82	$19.74	$2.17	$76.24
	08/01/2015	$45.51	$9.82	$19.74	$2.17	$77.24
	02/01/2016	$46.51	$9.82	$19.74	$2.17	$78.24
	08/01/2016	$47.66	$9.82	$19.74	$2.17	$79.39
	02/01/2017	$48.76	$9.82	$19.74	$2.17	$80.49
	08/01/2017	$49.86	$9.82	$19.74	$2.17	$81.59
	02/01/2018	$51.01	$9.82	$19.74	$2.17	$82.74

Apprentice - *SHEET METAL WORKER - Local 17-A*

Effective Date - 02/01/2014

Step	percent	Apprentice Base Wage	Health	Pension	Supplemental Unemployment	Total Rate
1	40	$17.10	$9.82	$4.28	$0.00	$31.20
2	40	$17.10	$9.82	$4.28	$0.00	$31.20
3	45	$19.24	$9.82	$8.70	$1.13	$38.89
4	45	$19.24	$9.82	$8.70	$1.13	$38.89
5	50	$21.38	$9.82	$9.49	$1.22	$41.91
6	50	$21.38	$9.82	$9.74	$1.23	$42.17
7	60	$25.66	$9.82	$11.05	$1.40	$47.93
8	65	$27.79	$9.82	$11.84	$1.48	$50.93
9	75	$32.07	$9.82	$13.41	$1.66	$56.96
10	85	$36.35	$9.82	$14.48	$1.82	$62.47

Effective Date - 08/01/2014

Step	percent	Apprentice Base Wage	Health	Pension	Supplemental Unemployment	Total Rate
1	40	$17.44	$9.82	$4.28	$0.00	$31.54
2	40	$17.44	$9.82	$4.28	$0.00	$31.54
3	45	$19.62	$9.82	$8.70	$1.13	$39.27
4	45	$19.62	$9.82	$8.70	$1.13	$39.27
5	50	$21.81	$9.82	$9.49	$1.22	$42.34
6	50	$21.81	$9.82	$9.74	$1.23	$42.60
7	60	$26.17	$9.82	$11.05	$1.40	$48.44
8	65	$28.35	$9.82	$11.84	$1.48	$51.49
9	75	$32.71	$9.82	$13.41	$1.66	$57.60
10	85	$37.07	$9.82	$14.48	$1.82	$63.19

Notes:

Steps are 6 mos.

Apprentice to Journeyworker Ratio:1:4

SIGN ERECTOR *PAINTERS LOCAL 35 - ZONE 2*	06/01/2013	$25.81	$7.07	$7.05	$0.00	$39.93

Classification	Effective Date	Base Wage	Health	Pension	Supplemental Unemployment	Total Rate

Apprentice - *SIGN ERECTOR - Local 35 Zone 2*

Effective Date - 06/01/2013

Step	percent	Apprentice Base Wage	Health	Pension	Supplemental Unemployment	Total Rate
1	50	$12.91	$7.07	$0.00	$0.00	$19.98
2	55	$14.20	$7.07	$2.45	$0.00	$23.72
3	60	$15.49	$7.07	$2.45	$0.00	$25.01
4	65	$16.78	$7.07	$2.45	$0.00	$26.30
5	70	$18.07	$7.07	$7.05	$0.00	$32.19
6	75	$19.36	$7.07	$7.05	$0.00	$33.48
7	80	$20.65	$7.07	$7.05	$0.00	$34.77
8	85	$21.94	$7.07	$7.05	$0.00	$36.06
9	90	$23.23	$7.07	$7.05	$0.00	$37.35

Notes:

Steps are 4 mos.

Apprentice to Journeyworker Ratio:1:1

SPECIALIZED EARTH MOVING EQUIP < 35 TONS *TEAMSTERS JOINT COUNCIL NO. 10 ZONE B*	06/01/2014	$31.59	$9.41	$8.80	$0.00	$49.80
	08/01/2014	$31.59	$9.91	$8.80	$0.00	$50.30
	12/01/2014	$31.59	$9.91	$9.33	$0.00	$50.83
	06/01/2015	$31.94	$9.91	$9.33	$0.00	$51.18
	08/01/2015	$31.94	$10.41	$9.33	$0.00	$51.68
	12/01/2015	$31.94	$10.41	$10.08	$0.00	$52.43
	06/01/2016	$32.44	$10.41	$10.08	$0.00	$52.93
	08/01/2016	$32.44	$10.91	$10.08	$0.00	$53.43
	12/01/2016	$32.44	$10.91	$10.89	$0.00	$54.24
SPECIALIZED EARTH MOVING EQUIP > 35 TONS *TEAMSTERS JOINT COUNCIL NO. 10 ZONE B*	06/01/2014	$31.88	$9.41	$8.80	$0.00	$50.09
	08/01/2014	$31.88	$9.91	$8.80	$0.00	$50.59
	12/01/2014	$31.88	$9.91	$9.33	$0.00	$51.12
	06/01/2015	$32.23	$9.91	$9.33	$0.00	$51.47
	08/01/2015	$32.23	$10.41	$9.33	$0.00	$51.97
	12/01/2015	$32.23	$10.41	$10.08	$0.00	$52.72
	06/01/2016	$32.73	$10.41	$10.08	$0.00	$53.22
	08/01/2016	$32.73	$10.91	$10.08	$0.00	$53.72
	12/01/2016	$32.73	$10.91	$10.89	$0.00	$54.53
SPRINKLER FITTER *SPRINKLER FITTERS LOCAL 550 - (Section A) Zone 1*	03/01/2014	$53.58	$8.42	$13.60	$0.00	$75.60
	10/01/2014	$54.73	$8.42	$13.60	$0.00	$76.75
	01/01/2015	$54.73	$8.42	$13.75	$0.00	$76.90
	03/01/2015	$55.73	$8.42	$13.75	$0.00	$77.90
	10/01/2015	$56.88	$8.42	$13.75	$0.00	$79.05
	01/01/2016	$56.88	$8.67	$13.90	$0.00	$79.45
	03/01/2016	$57.88	$8.67	$13.90	$0.00	$80.45
	10/01/2016	$59.03	$8.67	$13.90	$0.00	$81.60
	03/01/2017	$60.03	$8.67	$13.90	$0.00	$82.60

Classification	Effective Date	Base Wage	Health	Pension	Supplemental Unemployment	Total Rate

Apprentice - *SPRINKLER FITTER - Local 550 (Section A) Zone 1*

Effective Date - 03/01/2014

Step	percent	Apprentice Base Wage	Health	Pension	Supplemental Unemployment	Total Rate
1	35	$18.75	$8.42	$8.25	$0.00	$35.42
2	40	$21.43	$8.42	$8.25	$0.00	$38.10
3	45	$24.11	$8.42	$8.25	$0.00	$40.78
4	50	$26.79	$8.42	$8.25	$0.00	$43.46
5	55	$29.47	$8.42	$8.25	$0.00	$46.14
6	60	$32.15	$8.42	$8.25	$0.00	$48.82
7	65	$34.83	$8.42	$8.25	$0.00	$51.50
8	70	$37.51	$8.42	$8.25	$0.00	$54.18
9	75	$40.19	$8.42	$8.25	$0.00	$56.86
10	80	$42.86	$8.42	$8.25	$0.00	$59.53

Effective Date - 10/01/2014

Step	percent	Apprentice Base Wage	Health	Pension	Supplemental Unemployment	Total Rate
1	35	$19.16	$8.42	$8.25	$0.00	$35.83
2	40	$21.89	$8.42	$8.25	$0.00	$38.56
3	45	$24.63	$8.42	$8.25	$0.00	$41.30
4	50	$27.37	$8.42	$8.25	$0.00	$44.04
5	55	$30.10	$8.42	$8.25	$0.00	$46.77
6	60	$32.84	$8.42	$8.25	$0.00	$49.51
7	65	$35.57	$8.42	$8.25	$0.00	$52.24
8	70	$38.31	$8.42	$8.25	$0.00	$54.98
9	75	$41.05	$8.42	$8.25	$0.00	$57.72
10	80	$43.78	$8.42	$8.25	$0.00	$60.45

Notes: Apprentice entered prior 9/30/10:
40/45/50/55/60/65/70/75/80/85
Steps are 850 hours

Apprentice to Journeyworker Ratio:1:3

STEAM BOILER OPERATOR *OPERATING ENGINEERS LOCAL 4*	12/01/2013	$40.11	$10.00	$14.18	$0.00	$64.29

For apprentice rates see "Apprentice- OPERATING ENGINEERS"

TAMPERS, SELF-PROPELLED OR TRACTOR DRAWN *OPERATING ENGINEERS LOCAL 4*	12/01/2013	$40.11	$10.00	$14.18	$0.00	$64.29

For apprentice rates see "Apprentice- OPERATING ENGINEERS"

TERRAZZO FINISHERS *BRICKLAYERS LOCAL 3 - MARBLE & TILE*	02/01/2014	$47.00	$10.18	$18.15	$0.00	$75.33
	08/01/2014	$47.90	$10.18	$18.22	$0.00	$76.30
	02/01/2015	$48.46	$10.18	$18.22	$0.00	$76.86
	08/01/2015	$49.36	$10.18	$18.29	$0.00	$77.83
	02/01/2016	$49.93	$10.18	$18.29	$0.00	$78.40
	08/01/2016	$50.83	$10.18	$18.37	$0.00	$79.38
	02/01/2017	$51.40	$10.18	$18.37	$0.00	$79.95

Classification	Effective Date	Base Wage	Health	Pension	Supplemental Unemployment	Total Rate

Apprentice - *TERRAZZO FINISHER - Local 3 Marble & Tile*

Effective Date - 02/01/2014

Step	percent	Apprentice Base Wage	Health	Pension	Supplemental Unemployment	Total Rate
1	50	$23.50	$10.18	$18.15	$0.00	$51.83
2	60	$28.20	$10.18	$18.15	$0.00	$56.53
3	70	$32.90	$10.18	$18.15	$0.00	$61.23
4	80	$37.60	$10.18	$18.15	$0.00	$65.93
5	90	$42.30	$10.18	$18.15	$0.00	$70.63

Effective Date - 08/01/2014

Step	percent	Apprentice Base Wage	Health	Pension	Supplemental Unemployment	Total Rate
1	50	$23.95	$10.18	$18.22	$0.00	$52.35
2	60	$28.74	$10.18	$18.22	$0.00	$57.14
3	70	$33.53	$10.18	$18.22	$0.00	$61.93
4	80	$38.32	$10.18	$18.22	$0.00	$66.72
5	90	$43.11	$10.18	$18.22	$0.00	$71.51

Notes:

Apprentice to Journeyworker Ratio:1:3

TEST BORING DRILLER *LABORERS - FOUNDATION AND MARINE*	06/01/2014	$35.45	$7.30	$12.90	$0.00	$55.65
	12/01/2014	$36.20	$7.30	$12.90	$0.00	$56.40
	06/01/2015	$36.95	$7.30	$12.90	$0.00	$57.15
	12/01/2015	$37.70	$7.30	$12.90	$0.00	$57.90
	06/01/2016	$38.45	$7.30	$12.90	$0.00	$58.65
	12/01/2016	$39.45	$7.30	$12.90	$0.00	$59.65
For apprentice rates see "Apprentice- LABORER"						
TEST BORING DRILLER HELPER *LABORERS - FOUNDATION AND MARINE*	06/01/2014	$34.17	$7.30	$12.90	$0.00	$54.37
	12/01/2014	$34.92	$7.30	$12.90	$0.00	$55.12
	06/01/2015	$35.67	$7.30	$12.90	$0.00	$55.87
	12/01/2015	$36.42	$7.30	$12.90	$0.00	$56.62
	06/01/2016	$37.17	$7.30	$12.90	$0.00	$57.37
	12/01/2016	$38.17	$7.30	$12.90	$0.00	$58.37
For apprentice rates see "Apprentice- LABORER"						
TEST BORING LABORER *LABORERS - FOUNDATION AND MARINE*	06/01/2014	$34.05	$7.30	$12.90	$0.00	$54.25
	12/01/2014	$34.80	$7.30	$12.90	$0.00	$55.00
	06/01/2015	$35.55	$7.30	$12.90	$0.00	$55.75
	12/01/2015	$36.30	$7.30	$12.90	$0.00	$56.50
	06/01/2016	$37.05	$7.30	$12.90	$0.00	$57.25
	12/01/2016	$38.05	$7.30	$12.90	$0.00	$58.25
For apprentice rates see "Apprentice- LABORER"						
TRACTORS/PORTABLE STEAM GENERATORS *OPERATING ENGINEERS LOCAL 4*	12/01/2013	$40.11	$10.00	$14.18	$0.00	$64.29
For apprentice rates see "Apprentice- OPERATING ENGINEERS"						

Classification	Effective Date	Base Wage	Health	Pension	Supplemental Unemployment	Total Rate
TRAILERS FOR EARTH MOVING EQUIPMENT *TEAMSTERS JOINT COUNCIL NO. 10 ZONE B*	06/01/2014	$32.17	$9.41	$8.80	$0.00	$50.38
	08/01/2014	$32.17	$9.91	$8.80	$0.00	$50.88
	12/01/2014	$32.17	$9.91	$9.33	$0.00	$51.41
	06/01/2015	$32.52	$9.91	$9.33	$0.00	$51.76
	08/01/2015	$32.52	$10.41	$9.33	$0.00	$52.26
	12/01/2015	$32.52	$10.41	$10.08	$0.00	$53.01
	06/01/2016	$33.02	$10.41	$10.08	$0.00	$53.51
	08/01/2016	$33.02	$10.91	$10.08	$0.00	$54.01
	12/01/2016	$33.02	$10.91	$10.89	$0.00	$54.82
TUNNEL WORK - COMPRESSED AIR *LABORERS (COMPRESSED AIR)*	06/01/2014	$46.33	$7.30	$13.30	$0.00	$66.93
	12/01/2014	$47.08	$7.30	$13.30	$0.00	$67.68
	06/01/2015	$47.83	$7.30	$13.30	$0.00	$68.43
	12/01/2015	$48.58	$7.30	$13.30	$0.00	$69.18
	06/01/2016	$49.33	$7.30	$13.30	$0.00	$69.93
	12/01/2016	$50.33	$7.30	$13.30	$0.00	$70.93
For apprentice rates see "Apprentice- LABORER"						
TUNNEL WORK - COMPRESSED AIR (HAZ. WASTE) *LABORERS (COMPRESSED AIR)*	06/01/2014	$48.33	$7.30	$13.30	$0.00	$68.93
	12/01/2014	$49.08	$7.30	$13.30	$0.00	$69.68
	06/01/2015	$49.83	$7.30	$13.30	$0.00	$70.43
	12/01/2015	$50.58	$7.30	$13.30	$0.00	$71.18
	06/01/2016	$51.33	$7.30	$13.30	$0.00	$71.93
	12/01/2016	$52.33	$7.30	$13.30	$0.00	$72.93
For apprentice rates see "Apprentice- LABORER"						
TUNNEL WORK - FREE AIR *LABORERS (FREE AIR TUNNEL)*	06/01/2014	$38.40	$7.30	$13.30	$0.00	$59.00
	12/01/2014	$39.15	$7.30	$13.30	$0.00	$59.75
	06/01/2015	$39.90	$7.30	$13.30	$0.00	$60.50
	12/01/2015	$40.65	$7.30	$13.30	$0.00	$61.25
	06/01/2016	$41.40	$7.30	$13.30	$0.00	$62.00
	12/01/2016	$42.40	$7.30	$13.30	$0.00	$63.00
For apprentice rates see "Apprentice- LABORER"						
TUNNEL WORK - FREE AIR (HAZ. WASTE) *LABORERS (FREE AIR TUNNEL)*	06/01/2014	$40.40	$7.30	$13.30	$0.00	$61.00
	12/01/2014	$41.15	$7.30	$13.30	$0.00	$61.75
	06/01/2015	$41.90	$7.30	$13.30	$0.00	$62.50
	12/01/2015	$42.65	$7.30	$13.30	$0.00	$63.25
	06/01/2016	$43.40	$7.30	$13.30	$0.00	$64.00
	12/01/2016	$44.40	$7.30	$13.30	$0.00	$65.00
For apprentice rates see "Apprentice- LABORER"						
VAC-HAUL *TEAMSTERS JOINT COUNCIL NO. 10 ZONE B*	06/01/2014	$31.59	$9.41	$8.80	$0.00	$49.80
	08/01/2014	$31.59	$9.91	$8.80	$0.00	$50.30
	12/01/2014	$31.59	$9.91	$9.33	$0.00	$50.83
	06/01/2015	$31.94	$9.91	$9.33	$0.00	$51.18
	08/01/2015	$31.94	$10.41	$9.33	$0.00	$51.68
	12/01/2015	$31.94	$10.41	$10.08	$0.00	$52.43
	06/01/2016	$32.44	$10.41	$10.08	$0.00	$52.93
	08/01/2016	$32.44	$10.91	$10.08	$0.00	$53.43
	12/01/2016	$32.44	$10.91	$10.89	$0.00	$54.24

Classification	Effective Date	Base Wage	Health	Pension	Supplemental Unemployment	Total Rate
VOICE-DATA-VIDEO TECHNICIAN *ELECTRICIANS LOCAL 96*	06/01/2013	$25.86	$7.66	$10.09	$0.00	$43.61

Apprentice - *VOICE-DATA-VIDEO TECHNICIAN - Local 96*

Effective Date - 06/01/2013

Step	percent	Apprentice Base Wage	Health	Pension	Supplemental Unemployment	Total Rate
1	50	$12.93	$7.66	$2.85	$0.00	$23.44
2	55	$14.22	$7.66	$2.89	$0.00	$24.77
3	60	$15.52	$7.66	$9.78	$0.00	$32.96
4	65	$16.81	$7.66	$9.81	$0.00	$34.28
5	70	$18.10	$7.66	$9.85	$0.00	$35.61
6	75	$19.40	$7.66	$9.89	$0.00	$36.95
7	80	$20.69	$7.66	$9.93	$0.00	$38.28
8	85	$21.98	$7.66	$9.97	$0.00	$39.61

Notes:

Apprentice to Journeyworker Ratio:1:1

WAGON DRILL OPERATOR *LABORERS - ZONE 2*	06/01/2014	$30.60	$7.30	$12.10	$0.00	$50.00
	12/01/2014	$31.10	$7.30	$12.10	$0.00	$50.50
	06/01/2015	$31.60	$7.30	$12.10	$0.00	$51.00
	12/01/2015	$32.10	$7.30	$12.10	$0.00	$51.50
	06/01/2016	$32.60	$7.30	$12.10	$0.00	$52.00
	12/01/2016	$33.35	$7.30	$12.10	$0.00	$52.75
For apprentice rates see "Apprentice- LABORER"						
WASTE WATER PUMP OPERATOR *OPERATING ENGINEERS LOCAL 4*	12/01/2013	$40.49	$10.00	$14.18	$0.00	$64.67
For apprentice rates see "Apprentice- OPERATING ENGINEERS"						
WATER METER INSTALLER *PLUMBERS & GASFITTERS LOCAL 12*	03/01/2014	$49.41	$9.82	$14.29	$0.00	$73.52
	09/01/2014	$50.41	$9.82	$14.29	$0.00	$74.52
	03/01/2015	$51.41	$9.82	$14.29	$0.00	$75.52
	09/01/2015	$52.41	$9.82	$14.29	$0.00	$76.52
	03/01/2016	$53.56	$9.82	$14.29	$0.00	$77.67
	09/01/2016	$54.61	$9.82	$14.29	$0.00	$78.72
	03/01/2017	$55.61	$9.82	$14.29	$0.00	$79.72
For apprentice rates see "Apprentice- PLUMBER/PIPEFITTER" or "PLUMBER/GASFITTER"						

Outside Electrical - East

CABLE TECHNICIAN (Power Zone) *OUTSIDE ELECTRICAL WORKERS - EAST LOCAL 104*	09/01/2013	$25.66	$8.70	$4.48	$0.00	$38.84
For apprentice rates see "Apprentice- LINEMAN"						
CABLEMAN (Underground Ducts & Cables) *OUTSIDE ELECTRICAL WORKERS - EAST LOCAL 104*	09/01/2013	$36.55	$8.70	$6.58	$0.00	$51.83
For apprentice rates see "Apprentice- LINEMAN"						
DRIVER / GROUNDMAN CDL *OUTSIDE ELECTRICAL WORKERS - EAST LOCAL 104*	09/01/2013	$29.94	$8.70	$6.05	$0.00	$44.69
For apprentice rates see "Apprentice- LINEMAN"						

Classification	Effective Date	Base Wage	Health	Pension	Supplemental Unemployment	Total Rate
DRIVER / GROUNDMAN -Inexperienced (<2000 Hrs) *OUTSIDE ELECTRICAL WORKERS - EAST LOCAL 104* For apprentice rates see "Apprentice- LINEMAN"	09/01/2013	$23.52	$8.70	$5.24	$0.00	$37.46
EQUIPMENT OPERATOR (Class A CDL) *OUTSIDE ELECTRICAL WORKERS - EAST LOCAL 104* For apprentice rates see "Apprentice- LINEMAN"	09/01/2013	$36.35	$8.70	$9.43	$0.00	$54.48
EQUIPMENT OPERATOR (Class B CDL) *OUTSIDE ELECTRICAL WORKERS - EAST LOCAL 104* For apprentice rates see "Apprentice- LINEMAN"	09/01/2013	$32.08	$8.70	$6.59	$0.00	$47.37
GROUNDMAN *OUTSIDE ELECTRICAL WORKERS - EAST LOCAL 104* For apprentice rates see "Apprentice- LINEMAN"	09/01/2013	$23.52	$8.70	$3.72	$0.00	$35.94
GROUNDMAN -Inexperienced (<2000 Hrs.) *OUTSIDE ELECTRICAL WORKERS - EAST LOCAL 104* For apprentice rates see "Apprentice- LINEMAN"	09/01/2013	$19.25	$8.70	$2.85	$0.00	$30.80
JOURNEYMAN LINEMAN *OUTSIDE ELECTRICAL WORKERS - EAST LOCAL 104*	09/01/2013	$42.77	$8.70	$11.78	$0.00	$63.25

Apprentice - *LINEMAN (Outside Electrical) - East Local 104*

Effective Date - 09/01/2013

Step	percent	Apprentice Base Wage	Health	Pension	Supplemental Unemployment	Total Rate
1	60	$25.66	$8.70	$4.24	$0.00	$38.60
2	65	$27.80	$8.70	$4.71	$0.00	$41.21
3	70	$29.94	$8.70	$5.43	$0.00	$44.07
4	75	$32.08	$8.70	$6.16	$0.00	$46.94
5	80	$34.22	$8.70	$6.88	$0.00	$49.80
6	85	$36.35	$8.70	$7.62	$0.00	$52.67
7	90	$38.49	$8.70	$8.83	$0.00	$56.02

Notes:

Apprentice to Journeyworker Ratio:1:2

TELEDATA CABLE SPLICER *OUTSIDE ELECTRICAL WORKERS - EAST LOCAL 104*	07/16/2012	$26.33	$4.18	$2.79	$0.00	$33.30
TELEDATA LINEMAN/EQUIPMENT OPERATOR *OUTSIDE ELECTRICAL WORKERS - EAST LOCAL 104*	07/16/2012	$24.78	$4.18	$2.74	$0.00	$31.70
TELEDATA WIREMAN/INSTALLER/TECHNICIAN *OUTSIDE ELECTRICAL WORKERS - EAST LOCAL 104*	07/16/2012	$24.78	$4.18	$2.74	$0.00	$31.70
TREE TRIMMER *OUTSIDE ELECTRICAL WORKERS - EAST LOCAL 104* This classification applies only to tree work done: (a) for a utility company, R.E.A. cooperative, or railroad or coal mining company, and (b) for the purpose of operating, maintaining, or repairing the utility company's equipment, and (c) by a person who is using hand or mechanical cutting methods and is not on the ground. This classification does not apply to wholesale tree removal.	01/29/2012	$17.18	$3.37	$0.00	$0.00	$20.55
TREE TRIMMER GROUNDMAN *OUTSIDE ELECTRICAL WORKERS - EAST LOCAL 104* This classification applies only to tree work done: (a) for a utility company, R.E.A. cooperative, or railroad or coal mining company, and (b) for the purpose of operating, maintaining, or repairing the utility company's equipment, and (c) by a person who is using hand or mechanical cutting methods and is on the ground. This classification does not apply to wholesale tree removal.	01/29/2012	$15.15	$3.37	$0.00	$0.00	$18.52

Classification	Effective Date	Base Wage	Health	Pension	Supplemental Unemployment	Total Rate

Additional Apprentice Information:

Minimum wage rates for apprentices employed on public works projects are listed above as a percentage of the pre-determined hourly wage rate established by the Commissioner under the provisions of the M.G.L. c. 149, ss. 26-27D. Apprentice ratios are established by the Division of Apprenticeship Training pursuant to M.G.L. c. 23, ss. 11E-11L.

All apprentices must be registered with the Division of Apprenticeship Training in accordance with M.G.L. c. 23, ss. 11E-11L.

All steps are six months (1000 hours) unless otherwise specified.

* Ratios are expressed in allowable number of apprentices to journeymen or fraction thereof.
** Multiple ratios are listed in the comment field.
*** APP to JM; 1:1, 2:2, 2:3, 3:4, 4:4, 4:5, 4:6, 5:7, 6:7, 6:8, 6:9, 7:10, 8:10, 8:11, 8:12, 9:13, 10:13, 10:14, etc.
**** APP to JM; 1:1, 1:2, 2:3, 2:4, 3:5, 4:6, 4:7, 5:8, 6:9, 6:10, 7:11, 8:12, 8:13, 9:14, 10:15, 10:16, etc.

APPENDIX C

STATUTORY REFERENCS

PAYMENT PROCEDURES

MGL Chapter 30, Section 39F. (1) Every contract awarded pursuant to sections forty-four A to L, inclusive, of chapter one hundred and forty-nine shall contain the following subparagraphs (a) through (i) and every contract awarded pursuant to section thirty-nine M of chapter thirty shall contain the following subparagraphs (a) through (h) and in each case those subparagraphs shall be binding between the general contractor and each subcontractor.

(a) Forthwith after the general contractor receives payment on account of a periodic estimate, the general contractor shall pay to each subcontractor the amount paid for the labor performed and the materials furnished by that subcontractor, less any amount specified in any court proceedings barring such payment and also less any amount claimed due from the subcontractor by the general contractor.

(b) Not later than the sixty-fifth day after each subcontractor substantially completes his work in accordance with the plans and specifications, the entire balance due under the subcontract less amounts retained by the awarding authority as the estimated cost of completing the incomplete and unsatisfactory items of work, shall be due the subcontractor; and the awarding authority shall pay that amount to the general contractor. The general contractor shall forthwith pay to the subcontractor the full amount received from the awarding authority less any amount specified in any court proceedings barring such payment and also less any amount claimed due from the subcontractor by the general contractor.

(c) Each payment made by the awarding authority to the general contractor pursuant to subparagraphs (a) and (b) of this paragraph for the labor performed and the materials furnished by a subcontractor shall be made to the general contractor for the account of that subcontractor; and the awarding authority shall take reasonable steps to compel the general contractor to make each such payment to each such subcontractor. If the awarding authority has received a demand for direct payment from a subcontractor for any amount which has already been included in a payment to the general contractor or which is to be included in a payment to the general contractor for payment to the subcontractor as provided in subparagraphs (a) and (b), the awarding authority shall act upon the demand as provided in this section.

(d) If, within seventy days after the subcontractor has substantially completed the subcontract work, the subcontractor has not received from the general contractor the balance due under the subcontract including any amount due for extra labor and materials furnished to the general contractor, less any amount retained by the awarding authority as the estimated cost of completing the incomplete and unsatisfactory items of work, the subcontractor may demand direct payment of that balance from the awarding authority. The demand shall be by a sworn statement delivered to or sent by certified mail to the awarding authority, and a copy shall be delivered to or sent by certified mail to the general contractor at the same time. The demand shall contain a detailed breakdown of the balance due under the subcontract and also a statement of the status of completion of the subcontract work. Any demand made after substantial completion of the subcontract work shall be valid even if delivered or mailed

prior to the seventieth day after the subcontractor has substantially completed the subcontract work. Within ten days after the subcontractor has delivered or so mailed the demand to the awarding authority and delivered or so mailed a copy to the general contractor, the general contractor may reply to the demand. The reply shall be by a sworn statement delivered to or sent by certified mail to the awarding authority and a copy shall be delivered to or sent by certified mail to the subcontractor at the same time. The reply shall contain a detailed breakdown of the balance due under the subcontract including any amount due for extra labor and materials furnished to the general contractor and of the amount due for each claim made by the general contractor against the subcontractor.

(e) Within fifteen days after receipt of the demand by the awarding authority, but in no event prior to the seventieth day after substantial completion of the subcontract work, the awarding authority shall make direct payment to the subcontractor of the balance due under the subcontract including any amount due for extra labor and materials furnished to the general contractor, less any amount (i) retained by the awarding authority as the estimated cost of completing the incomplete or unsatisfactory items of work, (ii) specified in any court proceedings barring such payment, or (iii) disputed by the general contractor in the sworn reply; provided, that the awarding authority shall not deduct from a direct payment any amount as provided in part (iii) if the reply is not sworn to, or for which the sworn reply does not contain the detailed breakdown required by subparagraph (d). The awarding authority shall make further direct payments to the subcontractor forthwith after the removal of the basis for deductions from direct payments made as provided in parts (i) and (ii) of this subparagraph.

(f) The awarding authority shall forthwith deposit the amount deducted from a direct payment as provided in part (iii) of subparagraph (e) in an interest-bearing joint account in the names of the general contractor and the subcontractor in a bank in Massachusetts selected by the awarding authority or agreed upon by the general contractor and the subcontractor and shall notify the general contractor and the subcontractor of the date of the deposit and the bank receiving the deposit. The bank shall pay the amount in the account, including accrued interest, as provided in an agreement between the general contractor and the subcontractor or as determined by decree of a court of competent jurisdiction.

(g) All direct payments and all deductions from demands for direct payments deposited in an interest-bearing account or accounts in a bank pursuant to subparagraph (f) shall be made out of amounts payable to the general contractor at the time of receipt of a demand for direct payment from a subcontractor and out of amounts which later become payable to the general contractor and in the order of receipt of such demands from subcontractors. All direct payments shall discharge the obligation of the awarding authority to the general contractor to the extent of such payment.

(h) The awarding authority shall deduct from payments to a general contractor amounts which, together with the deposits in interest-bearing accounts pursuant to subparagraph (f), are sufficient to satisfy all unpaid balances of demands for direct payment received from subcontractors. All such amounts shall be earmarked for such direct payments, and the subcontractors shall have a right in such deductions prior to any claims against such amounts by creditors of the general contractor.

(i) If the subcontractor does not receive payment as provided in subparagraph (a) or if the general contractor does not submit a periodic estimate for the value of the labor or materials performed or furnished by the subcontractor and the subcontractor does not receive payment for same when due less the deductions provided for in subparagraph (a), the subcontractor may demand direct payment by following the procedure in subparagraph (d) and the general contractor may file a sworn reply as

provided in that same subparagraph. A demand made after the first day of the month following that for which the subcontractor performed or furnished the labor and materials for which the subcontractor seeks payment shall be valid even if delivered or mailed prior to the time payment was due on a periodic estimate from the general contractor. Thereafter the awarding authority shall proceed as provided in subparagraph (e), (f), (g) and (h).

(2) Any assignment by a subcontractor of the rights under this section to a surety company furnishing a bond under the provisions of section twenty-nine of chapter one hundred forty-nine shall be invalid. The assignment and subrogation rights of the surety to amounts included in a demand for direct payment which are in the possession of the awarding authority or which are on deposit pursuant to subparagraph (f) of paragraph (1) shall be subordinate to the rights of all subcontractors who are entitled to be paid under this section and who have not been paid in full.

(3) "Subcontractor" as used in this section (i) for contracts awarded as provided in sections forty-four A to forty-four H, inclusive, of chapter one hundred forty-nine shall mean a person who files a sub-bid and receives a subcontract as a result of that filed sub-bid or who is approved by the awarding authority in writing as a person performing labor or both performing labor and furnishing materials pursuant to a contract with the general contractor, (ii) for contracts awarded as provided in paragraph (a) of section thirty-nine M of chapter thirty shall mean a person approved by the awarding authority in writing as a person performing labor or both performing labor and furnishing materials pursuant to a contract with the general contractor, and (iii) for contracts with the commonwealth not awarded as provided in forty-four A to forty-four H, inclusive, of chapter one hundred forty-nine shall also mean a person contracting with the general contractor to supply materials used or employed in a public works project for a price in excess of five thousand dollars.

(4) A general contractor or a subcontractor shall enforce a claim to any portion of the amount of a demand for direct payment deposited as provided in subparagraph (f) of paragraph 1 by a petition in equity in the superior court against the other and the bank shall not be a necessary party. A subcontractor shall enforce a claim for direct payment or a right to require a deposit as provided in subparagraph (f) of paragraph 1 by a petition in equity in the superior court against the awarding authority and the general contractor shall not be a necessary party. Upon motion of any party the court shall advance for speedy trial any petition filed as provided in this paragraph. Sections fifty-nine and fifty-nine B of chapter two hundred thirty-one shall apply to such petitions. The court shall enter an interlocutory decree upon which execution shall issue for any part of a claim found due pursuant to sections fifty-nine and fifty-nine B and, upon motion of any party, shall advance for speedy trial the petition to collect the remainder of the claim. Any party aggrieved by such interlocutory decree shall have the right to appeal therefrom as from a final decree. The court shall not consolidate for trial the petition of any subcontractor with the petition of one or more subcontractors or the same general contract unless the court finds that a substantial portion of the evidence of the same events during the course of construction (other than the fact that the claims sought to be consolidated arise under the same general contract) is applicable to the petitions sought to be consolidated and that such consolidation will prevent unnecessary duplication of evidence. A decree in any such proceeding shall not include interest on the disputed amount deposited in excess of the interest earned for the period of any such deposit. No person except a subcontractor filing a demand for direct payment for which no funds due the general contractor are available for direct payment shall have a right to file a petition in court of equity against the awarding authority claiming a demand for direct payment is premature and such subcontractor must file the petition before the awarding authority has made a direct payment to

the subcontractor and has made a deposit of the disputed portion as provided in part (iii) of subparagraph (e) and in subparagraph (f) of paragraph (1).

(5) In any petition to collect any claim for which a subcontractor has filed a demand for direct payment the court shall, upon motion of the general contractor, reduce by the amount of any deposit of a disputed amount by the awarding authority as provided in part (iii) of subparagraph (e) and in subparagraph (f) of paragraph (1) any amount held under a trustee writ or pursuant to a restraining order or injunction.

MGL Chapter 30, Section 39G. Upon substantial completion of the work required by a contract with the commonwealth, or any agency or political subdivision thereof, for the construction, reconstruction, alteration, remodeling, repair or improvement of public ways, including bridges and other highway structures, sewers and, water mains, airports and other public works, the contractor shall present in writing to the awarding authority its certification that the work has been substantially completed. Within twenty-one days thereafter, the awarding authority shall present to the contractor either a written declaration that the work has been substantially completed or an itemized list of incomplete or unsatisfactory work items required by the contract sufficient to demonstrate that the work has not been substantially completed. The awarding authority may include with such list a notice setting forth a reasonable time, which shall not in any event be prior to the contract completion date, within which the contractor must achieve substantial completion of the work. In the event that the awarding authority fails to respond, by presentation of a written declaration or itemized list as aforesaid, to the contractor's certification within the twenty-one day period, the contractor's certification shall take effect as the awarding authority's declaration that the work has been substantially completed.

Within sixty-five days after the effective date of a declaration of a substantial completion, the awarding authority shall prepare and forthwith send to the contractor for acceptance a substantial completion estimate for the quantity and price of the work done and all but one per cent retainage on that work, including the quantity, price and all but one per cent retainage for the undisputed part of each work item and extra work item in dispute but excluding the disputed part thereof, less the estimated cost of completing all incomplete and unsatisfactory work items and less the total periodic payments made to date for the work. The awarding authority also shall deduct from the substantial completion estimate an amount equal to the sum of all demands for direct payment filed by subcontractors and not yet paid to subcontractors or deposited in joint accounts pursuant to section thirty-nine F, but no contract subject to said section thirty-nine F shall contain any other provision authorizing the awarding authority to deduct any amount by virtue of claims asserted against the contract by subcontractors, material suppliers or others.

If the awarding authority fails to prepare and send to the contractor any substantial completion estimate required by this section on or before the date herein above set forth, the awarding authority shall pay to the contractor interest on the amount which would have been due to the contractor pursuant to such substantial completion estimate at the rate of three percentage points above the rediscount rate then charged by the Federal Reserve Bank of Boston from such date to the date on which the awarding authority sends that substantial completion estimate to the contractor for acceptance or to the date of payment therefor, whichever occurs first. The awarding authority shall include the amount of such interest in the substantial completion estimate.

Within fifteen days after the effective date of the declaration of substantial completion, the awarding authority shall send to the contractor by certified mail, return receipt requested, a complete list of all incomplete or unsatisfactory work items, and, unless delayed by causes beyond his control, the contractor shall complete all such work items within forty-five days after the receipt of such list or before the then contract completion date, whichever is later. If the contractor fails to complete such work within such time, the awarding authority may, subsequent to seven days' written notice to the contractor by certified mail, return receipt requested, terminate the contract and complete the incomplete or unsatisfactory work items and charge the cost of same to the contractor.

Within thirty days after receipt by the awarding authority of a notice from the contractor stating that all of the work required by the contract has been completed, the awarding authority shall prepare and forthwith send to the contractor for acceptance a final estimate for the quantity and price of the work done and all retainage on that work less all payments made to date, unless the awarding authority's inspection shows that work items required by the contract remain incomplete or unsatisfactory, or that documentation required by the contract has not been completed. If the awarding authority fails to prepare and send to the contractor the final estimate within thirty days after receipt of notice of completion, the awarding authority shall pay to the contractor interest on the amount which would have been due to the contractor pursuant to such final estimate at the rate hereinabove provided from the thirtieth day after such completion until the date on which the awarding authority sends the final estimate to the contractor for acceptance or the date of payment therefor, whichever occurs first, provided that the awarding authority's inspection shows that no work items required by the contract remain incomplete or unsatisfactory. Interest shall not be paid hereunder on amounts for which interest is required to be paid in connection with the substantial completion estimate as hereinabove provided. The awarding authority shall include the amount of the interest required to be paid hereunder in the final estimate.

The awarding authority shall pay the amount due pursuant to any substantial completion or final estimate within thirty-five days after receipt of written acceptance for such estimate from the contractor and shall pay interest on the amount due pursuant to such estimate at the rate hereinabove provided from that thirty-fifth day to the date of payment. Within 15 days, 30 days in the case of the commonwealth, after receipt from the contractor, at the place designated by the awarding authority, if such place is so designated, of a periodic estimate requesting payment of the amount due for the preceding periodic estimate period, the awarding authority shall make a periodic payment to the contractor for the work performed during the preceding periodic estimate period and for the materials not incorporated in the work but delivered and suitably stored at the site, or at some location agreed upon in writing, to which the contractor has title or to which a subcontractor has title and has authorized the contractor to transfer title to the awarding authority, upon certification by the contractor that he is the lawful owner and that the materials are free from all encumbrances. The awarding authority shall include with each such payment interest on the amount due pursuant to such periodic estimate at the rate herein above provided from the due date. In the case of periodic payments, the contracting authority may deduct from its payment a retention based on its estimate of the fair value of its claims against the contractor, a retention for direct payments to subcontractors based on demands for same in accordance with the provisions of section thirty-nine F, and a retention to secure satisfactory performance of the contractual work not exceeding five per cent of the approved amount of any periodic payment, and the same right to retention shall apply to bonded subcontractors entitled to direct payment under section thirty-nine F of chapter thirty; provided, that a five per cent value of all items that are planted in the ground shall be deducted from the periodic payments until final acceptance.

No periodic, substantial completion or final estimate or acceptance or payment thereof shall bar a contractor from reserving all rights to dispute the quantity and amount of, or the failure of the awarding authority to approve a quantity and amount of, all or part of any work item or extra work item.

Substantial completion, for the purposes of this section, shall mean either that the work required by the contract has been completed except for work having a contract price of less than one per cent of the then adjusted total contract price, or substantially all of the work has been completed and opened to public use except for minor incomplete or unsatisfactory work items that do not materially impair the usefulness of the work required by the contract.

MGL Chapter 30, Section 39K. Every contract for the construction, reconstruction, alteration, remodeling, repair or demolition of any public building by the commonwealth, or by any county, city, town, district, board, commission or other public body, when the amount is more than five thousand dollars in the case of the commonwealth and more than two thousand dollars in the case of any county, city, town, district, board, commission or other public body, shall contain the following paragraph:— Within fifteen days (30 days in the case of the commonwealth, including local housing authorities) after receipt from the contractor, at the place designated by the awarding authority if such a place is so designated, of a periodic estimate requesting payment of the amount due for the preceding month, the awarding authority will make a periodic payment to the contractor for the work performed during the preceding month and for the materials not incorporated in the work but delivered and suitably stored at the site (or at some location agreed upon in writing) to which the contractor has title or to which a subcontractor has title and has authorized the contractor to transfer title to the awarding authority, upon certification by the contractor that he is the lawful owner and that the materials are free from all encumbrances, but less (1) a retention based on its estimate of the fair value of its claims against the contractor and less (2) a retention for direct payments to subcontractors based on demands for same in accordance with the provisions of section thirty-nine F, and less (3) a retention not exceeding five per cent of the approved amount of the periodic payment. After the receipt of a periodic estimate requesting final payment and within sixty-five days after (a) the contractor fully completes the work or substantially completes the work so that the value of the work remaining to be done is, in the estimate of the awarding authority, less than one per cent of the original contract price, or (b) the contractor substantially completes the work and the awarding authority takes possession for occupancy, whichever occurs first, the awarding authority shall pay the contractor the entire balance due on the contract less (1) a retention based on its estimate of the fair value of its claims against the contractor and of the cost of completing the incomplete and unsatisfactory items of work and less (2) a retention for direct payments to subcontractors based on demands for same in accordance with the provisions of section thirty-nine F, or based on the record of payments by the contractor to the subcontractors under this contract if such record of payment indicates that the contractor has not paid subcontractors as provided in section thirty-nine F. If the awarding authority fails to make payment as herein provided, there shall be added to each such payment daily interest at the rate of three percentage points above the rediscount rate than charged by the Federal Reserve Bank of Boston commencing on the first day after said payment is due and continuing until the payment is delivered or mailed to the contractor; provided, that no interest shall be due, in any event, on the amount due on a periodic estimate for final payment until fifteen days (twenty-four days in the case of the commonwealth) after receipt of such a periodic estimate from the contractor, at the place designated by the awarding authority if such a place is so designated. The contractor agrees to pay to each subcontractor a portion of any such interest paid in accordance with the amount due each subcontractor.

The awarding authority may make changes in any periodic estimate submitted by the contractor and the payment due on said periodic estimate shall be computed in accordance with the changes so made, but such changes or any requirement for a corrected periodic estimate shall not affect the due date for the periodic payment or the date for the commencement of interest charges on the amount of the periodic payment computed in accordance with the changes made, as provided herein; provided, that the awarding authority may, within seven days after receipt, return to the contractor for correction, any periodic estimate which is not in the required form or which contains computations not arithmetically correct and, in that event, the date of receipt of such periodic estimate shall be the date of receipt of the corrected periodic estimate in proper form and with arithmetically correct computations. The date of receipt of a periodic estimate received on a Saturday shall be the first working day thereafter. The provisions of section thirty-nine G shall not apply to any contract for the construction, reconstruction, alteration, remodeling, repair or demolition of any public building to which this section applies.

All periodic estimates shall be submitted to the awarding authority, or to its designee as set forth in writing to the contractor, and the date of receipt by the awarding authority or its designee shall be marked on the estimate. All periodic estimates shall contain a separate item for each filed subtrade and each sub-subtrade listed in sub-bid form as required by specifications and a column listing the amount paid to each subcontractor and sub-subcontractor as of the date the periodic estimate is filed. The person making payment for the awarding authority shall add the daily interest provided for herein to each payment for each day beyond the due date based on the date of receipt marked on the estimate.

A certificate of the architect to the effect that the contractor has fully or substantially completed the work shall, subject to the provisions of section thirty-nine J, be conclusive for the purposes of this section.

Notwithstanding the provisions of this section, at any time after the value of the work remaining to be done is, in the estimation of the awarding authority, less than 1 per cent of the adjusted contract price, or the awarding authority has determined that the contractor has substantially completed the work and the awarding authority has taken possession for occupancy, the awarding authority may send to the general contractor by certified mail, return receipt requested, a complete and final list of all incomplete and unsatisfactory work items, including, for each item on the list, a good faith estimate of the fair and reasonable cost of completing such item. The general contractor shall then complete all such work items within 30 days of receipt of such list or before the contract completion date, whichever is later. If the general contractor fails to complete all incomplete and unsatisfactory work items within 45 days after receipt of such items furnished by the awarding authority or before the contract completion date, whichever is later, subsequent to an additional 14 days' written notice to the general contractor by certified mail, return receipt requested, the awarding authority may terminate the contract and complete the incomplete and unsatisfactory work items and charge the cost of same to the general contractor and such termination shall be without prejudice to any other rights or remedies the awarding authority may have under the contract. The awarding authority shall note any such termination in the evaluation form to be filed by the awarding authority pursuant to the provisions of section 44D of chapter 149.

RECONSTRUCTION OF HOUDE STREET AND APPURTENANT WORK

LOCUS
1"=250'

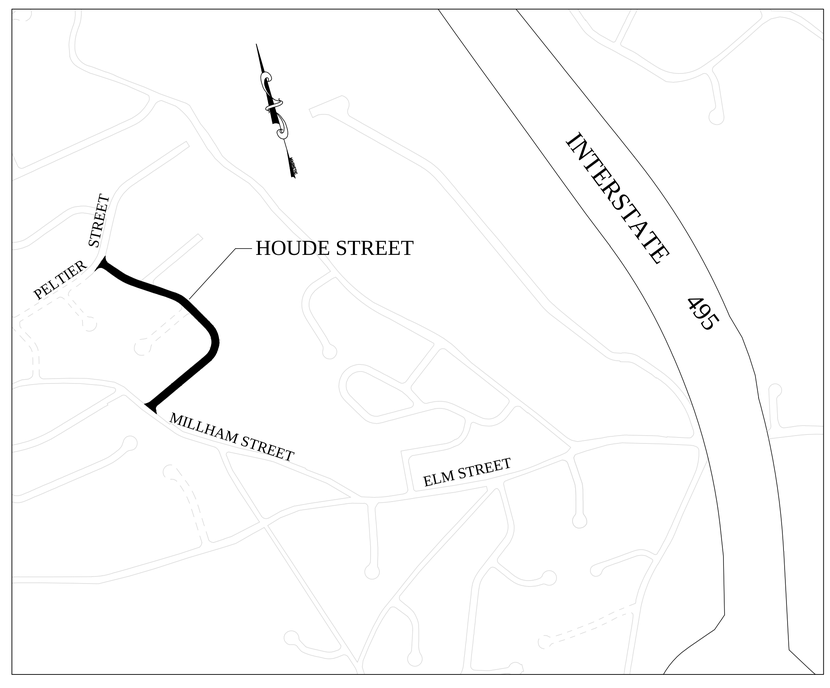

COVER SHEET	1
CONSTRUCTION NOTES, LEGENDS AND TYPICAL SECTIONS	2
HOUDE STREET CONSTRUCTION PLANS	3 - 6
CONSTRUCTION DETAILS	7 - 11

CONTRACT NO. ED 2014-14
JUNE 24, 2014

UNLESS OTHERWISE PROVIDED FOR IN THE PROJECT SPECIFICATIONS, THE FOLLOWING DOCUMENTS SHALL GOVERN THE CONSTRUCTION ON THIS PROJECT:

-THE 1995 MHD STANDARD SPECIFICATIONS FOR HIGHWAYS AND BRIDGES....AS AMENDED
- THE SUPPLEMENTAL SPECIFICATIONS DATED JUNE 6, 2006...AS AMMENDED.
-THE STANDARD SPECIAL PROVISIONS DATED APRIL 21, 2005....AS AMENDED
-THE 2006 PROJECT DEVELOPMENT & DESIGN GUIDE....AS AMENDED
- THE 1977 CONSTRUCTION STANDARDS...AS .AMENDED
- THE APRIL 2003 METRIC/ENGLISH SUPPLEMENTAL DRAWINGS AND ANY AMENDMENTS THERETO....AS AMMENDED
-THE AMERICAN STANDARD FOR NURSERY STOCK (ANSI Z60.1-1996)....AS AMENDED

	ISSUED FOR BID

CITY OF MARLBOROUGH DATE

PREPARED BY: City of Marlborough
Department of Public Works
Engineering Division
135 Neil Street
Marlborough, MA 01752

CONSTRUCTION NOTES

1. BASE PLANS AND TOPOGRAPHIC INFORMATION WERE PREPARED FROM SURVEY DATA COMPILED BY THE CITY OF MARLBOROUGH, DEPARTMENT OF PUBLIC WORKS, ENGINEERING DIVISION.

2. THE LOCATIONS OF EXISTING UNDERGROUND UTILITIES ARE SHOWN IN AN APPROXIMATE WAY ONLY AND HAVE NOT BEEN INDEPENDENTLY VERIFIED BY THE CITY OR ITS REPRESENTATIVE. THE CONTRACTOR SHALL DETERMINE THE EXACT LOCATION OF ALL EXISTING UTILITES BEFORE COMMENCING WORK AND SHALL BE FULLY RESPONSIBLE FOR ANY AND ALL DAMAGES WHICH MIGHT BE OCCASIONED BY THE CONTRACTOR'S FAILURE TO EXACTLY LOCATE AND PROTECT ANY AND ALL UNDERGROUND UTILITIES.

3. WHERE AN EXISTING UTILITY IS FOUND TO CONFLICT WITH PROPOSED WORK, THE TYPE, LOCATION, ELEVATION, AND SIZE OF THE UTILITY SHALL BE ACCURATELY DETERMINED BY THE CONTRACTOR, AND THE INFORMATION FURNISHED TO THE CITY ENGINEER FOR RESOLUTION OF THE CONFLICT.

4. THE CONTRACTOR SHALL ALTER THE MASONRY OF THE TOP SECTION OF ALL EXISTING DRAINAGE AND SEWER STRUCTURES AS NECESSARY FOR CHANGES IN GRADE AND RESET ALL WATER, SEWER AND DRAINAGE FRAMES, GRATES AND BOXES TO THE PROPOSED FINISH GRADE. STRUCTURE ADJUSTMENTS SHALL REQUIRE THE USE OF RED CLAY BRICK CONFORMING TO M4.05.2 AND CEMENT CONCRETE CONFORMING TO M4.02.0 OF THE COMMONWEALTH OF MASSACHUSETTS CONSTRUCTION STANDARDS FOR HIGHWAY AND BRIDGES AS MOST RECENTLY AMENDED.

5. THE CONTRACTOR SHALL MAKE ALL ARRANGEMENTS FOR THE ALTERATION AND ADJUSTMENT OF GAS, ELECTRIC, TELEPHONE AND ANY OTHER PRIVATE UTILITIES THROUGH THE RESPECTIVE UTILITY COMPANIES AT NO ADDITIONAL COMPENSATION.

6. TREES AND SHRUBS WITHIN THE LIMITS OF GRADING SHALL BE REMOVED ONLY UPON APPROVAL OF THE CITY ENGINEER.

7. AREAS OUTSIDE THE LIMITS OF PROPOSED WORK DISTURBED BY THE CONTRACTOR'S OPERATIONS SHALL BE RESTORED BY THE CONTRACTOR TO THEIR ORIGINAL CONDITION AT THE CONTRACTOR'S EXPENSE.

8. THE TERM "PROPOSED" (PROP.) MEANS WORK TO BE CONSTRUCTED USING NEW MATERIALS OR WHERE APPLICABLE, AND APPROVED BY THE CITY ENGINEER, RE-USING EXISTING MATERIALS SUCH AS THOSE IDENTIFIED AS "REMOVE AND RESET" (R&R).

9. JOINTS BETWEEN NEW BITUMINOUS CONCRETE ROADWAY PAVEMENT AND SAWCUT EXISTING PAVEMENT SHALL BE SEALED WITH HOT POURED RUBBERIZED ASPHALT SEALER AND BACKSANDED.

10. THE CONTRACTOR SHALL NOT ALLOW DEWATERING TO BE DIRECTLY DISCHARGED INTO WETLANDS. SEDIMENTATION BASINS SHALL BE CONSTRUCTED AS NECESSARY. NO WORK SHALL TAKE PLACE UNTIL SUCH TIME AS SILT SACKS HAVE BEEN PLACED/INSTALLED IN EXISTING CATCH BASINS AND APPROVED BY THE CITY ENGINEER.

11. IT IS CRITICAL THAT THE CONTRACTOR STAY WITHIN THE RIGHT-OF-WAY LAYOUT OR LIMIT OF WORK AS SHOWN ON THE DRAWINGS.

12. ALL DRIVEWAYS ARE TO BE REPAVED TO THE LIMITS DETERMINED BY THE CITY ENGINEER.

13. MANHOLE LOCATIONS ARE APPROXIMATE AND IN SOME CASES MAY BE ALTERED TO MINIMIZE PIPE CUTTING OR FOR OTHER REASONS IF APPROVED IN WRITING BY THE CITY ENGINEER.

14. UTILITY SERVICE CONNECTIONS TO HOUSES ARE NOT SHOWN OR ARE APPROXIMATES. THE CONTRACTOR SHALL BE RESPONSIBLE FOR HAVING REPAIRS MADE TO ANY UTILITY SERVICES DISTURBED DURING EXCAVATION AT NO ADDITIONAL COMPENSATION.

15. GAS MAINS AND TELEPHONE LINES ARE ASSUMED TO HAVE 3 FEET OF COVER UNLESS NOTED OTHERWISE. WATER MAINS ARE ASSUMED TO HAVE 5 FEET OF COVER UNLESS NOTED OTHERWISE. IT IS NOT WARRANTED THAT ALL UTILITIES ARE SHOWN OR THAT THEY ARE PLACED AT THESE ASSUMED DEPTHS. THE CONTRACTOR IS RESPONSIBLE FOR COORDINATING THE RELOCATION OF ANY CONFLICTING UTILITIES WITH THE RESPECTIVE UTILITY COMPANY. RELOCATION OF UTILITIES AND/OR THEIR APPURTENANCES REQUIRED TO ACCOMMODATE THE NEW WORK SHALL BE THE RESPONSIBILITY OF THE CONTRACTOR. FOR THE COST INFORMATION CONCERNING RELOCATION OF UTILITIES SEE SPECIFICATIONS GENERAL CONDITIONS 25 NOTICE TO UTILITIES.

16. ALL EXISTING STATE, COUNTY, CITY AND TOWN LINES AND PRIVATE PROPERTY LINES HAVE BEEN ESTABLISHED FROM AVAILABLE INFORMATION AND THEIR EXACT LOCATION ARE NOT GUARANTEED.

17. BACKFILL SHALL BE UNIFORMLY DISTRIBUTED IN SUCCESSIVE LAYERS, EACH LAYER BEING THOROUGHLY COMPACTED BEFORE THE SUCCEEDING LAYER IS PLACED. THE ENTIRE WIDTH OF THE TRENCH SHALL BE MECHANICALLY OR HAND TAMPED IN SIX (6) INCH LIFTS, A MINIMUM OF TWO (2) FEET ABOVE UTILITY INSTALLATION, AND MECHANICALLY TAMPED THE REMAINDER OR THE FILL IN LIFT DEPTHS NOT GREATER THAN SIX (6) INCHES. THE TOP LAYER OF BACKFILL SHALL BE FOURTEEN (14) INCHES (IN A TEMPORARY TRENCH), AND TWELVE (12) INCHES (IN A PERMANENT TRENCH) OF GRAVEL COMPACTED TO 97% OF MAXIMUM DENSITY.

CONSTRUCTION LEGEND

EXIST. LEGEND	PROP. LEGEND
TREE/HEDGE	TREE/HEDGE
HEDGE	HEDGE
UTILITY POLE	UTILITY POLE
SIGN	SIGN
HYDRANT	HYDRANT
WATER GATE	WATER GATE
GAS GATE	GAS GATE
DRAIN MANHOLE	DRAIN MANHOLE
SEWER MANHOLE	SEWER MANHOLE
CATCH BASIN	CATCH BASIN
ELECTRICAL BOX	ELECTRICAL BOX
SUBDRAIN CLEANOUT	SUBDRAIN CLEANOUT
STOCKADE FENCE	STOCKADE FENCE
CHAINLINK FENCE	CHAINLINK FENCE
PICKET FENCE	PICKET FENCE
POST & RAIL FENCE	POST & RAIL FENCE
STONE WALL	STONE WALL
RAILROAD TIE WALL	RAILROAD TIE WALL
RETAINING WALL	RETAINING WALL
BLOCK WALL	BLOCK WALL
FLAGSTONE WALKWAY	FLAGSTONE WALKWAY
BRICK WALKWAY	BRICK WALKWAY
PROPERTY/RIGHT OF WAY LINE	BITUMINOUS BLENDING LIMITS
CONCRETE SIDEWALK/WALKWAY	CONCRETE SIDEWALK/WALKWAY
GRAVEL DRIVEWAY	DETECTABLE WARNING PANEL

CONSTRUCTION ABBREVIATIONS

ADJ= ADJUST
BIT= BITUMINOUS
CB= CATCH BASIN
CONC= CONCRETE
RCP=REINFORCED CONCRETE PIPE
DIP=DUCTILE IRON PIPE
VCP=VITRIFIED CLAY PIPE
DMH= DRAIN MANHOLE
DYCL= DOUBLE YELLOW CENTERLINE
GG= GAS GATE
EOP= EDGE OF PAVEMENT
EXIST= EXISTING
HYD= HYDRANT
LCB=LAND COURT BOUND
PL= PROPERTY LINE
PROP= PROPOSED
PVM'T= PAVEMENT
R&R= REMOVE & RESET
R&S= REMOVE & STACK
ROW= RIGHT OF WAY
SMH= SEWER MANHOLE
SW= SIDEWALK
TYP= TYPICAL
UP= UTILITY POLE
WCR= WHEEL CHAIR RAMP
WG= WATER GATE
F&C= FRAME & COVER
F&G= FRAME & GRATE

WATER NOTES

1. ALL WATER SERVICES SHALL BE TYPE "K" COPPER WITH A MIN. DIAMETER OF 3/4". LARGER SERVICES SHALL BE REPLACED IN KIND AS DIRECTED BY THE CITY ENGINEER.

2. ALL EXISTING LEAD AND PLASTIC WATER SERVICES SHALL BE REPLACED FROM THE MAIN TO THE CURB STOP WITH COPPER. THESE SERVICES ARE SHOWN ON THE PLAN WHERE KNOWN. ANY ADDITIONAL LEAD OR PLASTIC SERVICES SHALL BE REPLACED AS DIRECTED BY THE CITY ENGINEER.

3. ALL PROPOSED CURB STOPS SHALL BE LOCATED BEHIND THE BACK OF SIDEWALK OR IMMEDIATELY OUTSIDE THE ROAD LAYOUT WHERE POSSIBLE.

4. CONTRACTOR IS RESPONSIBLE FOR NOTIFYING ANY ABUTTERS AFFECTED BY A WATER SHUTDOWN (24 HOURS IN ADVANCE).

TYPICAL ROADWAY CROSS SECTION

N.T.S.

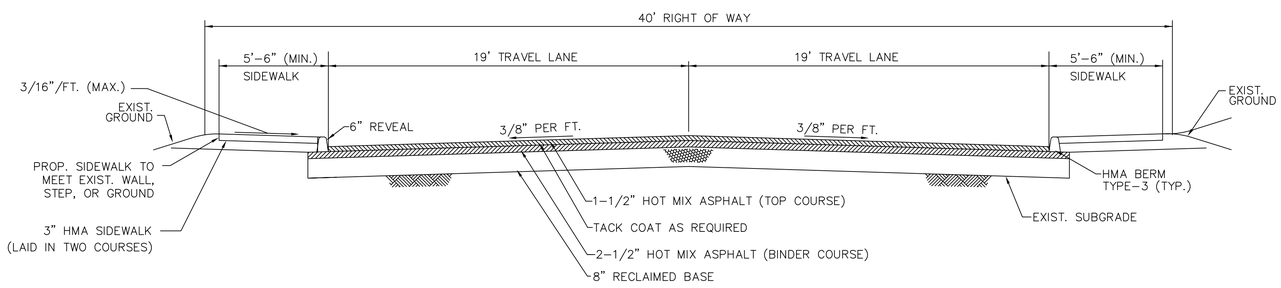

CITY OF MARLBOROUGH
DEPARTMENT OF PUBLIC WORKS
Engineering Division
135 Neil Street
Marlborough, MA 01752
p. (508) 624-6910
f. (508) 624-7699
www.marlborough-ma.gov

REVISIONS

No.	Date	Description
1.	7/1	MJD COMMENTS

Drawn By:	Designed By:	Checked By:	Approved By:
ENG	ENG	MJP	EP

Project Title:
RECONSTRUCTION OF HOUDE STREET AND APPURTENANT WORK

Sheet Title:
CONSTRUCTION NOTES, LEGENDS AND TYPICAL SECTION

Contract No: ED-2014-14
Date: 6-24-2014
Scale: N.T.S.
Sheet No: 2

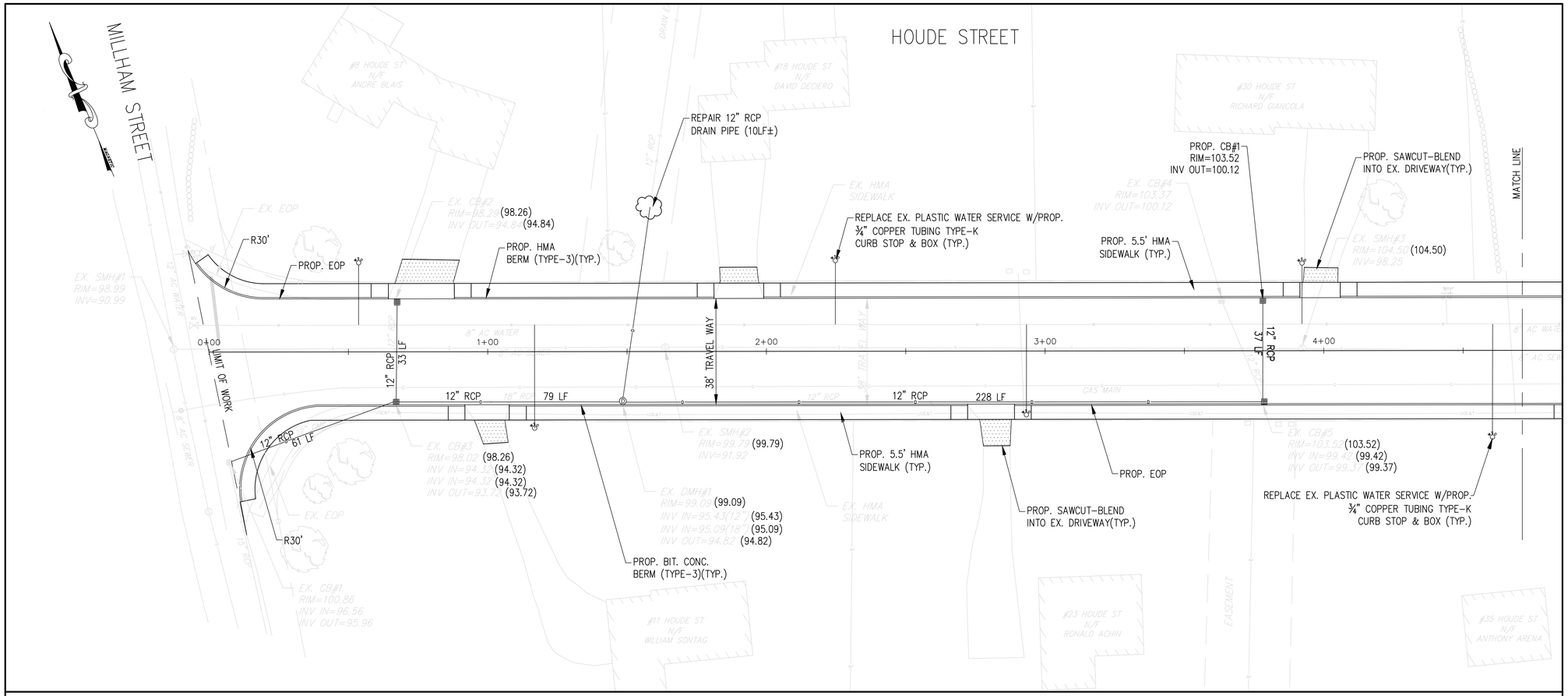

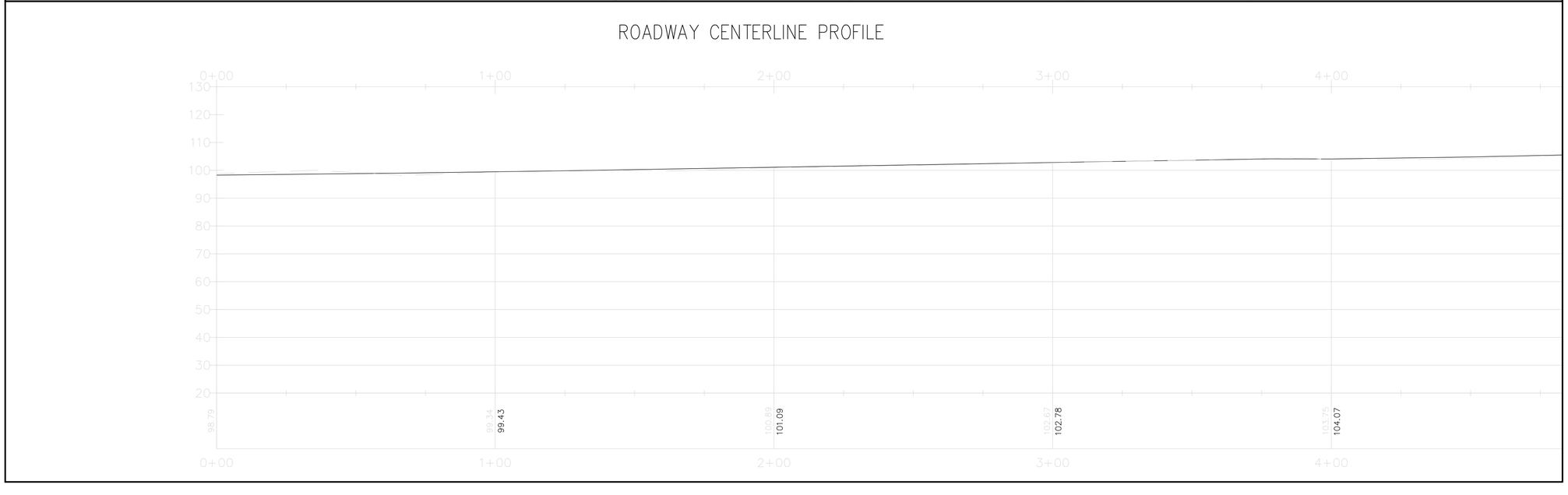

CITY OF MARLBOROUGH
DEPARTMENT OF PUBLIC WORKS
Engineering Division
135 Neil Street
Marlborough, MA 01752
p. (508) 624-6910
f. (508) 624-7699
www.marlborough-ma.gov

REVISIONS

No.	Date	Description
1.	7/1	MJD COMMENTS

Drawn By:	Designed By:	Checked By:	Approved By:
ED	ED	MJD	ENG

Project Title:

RECONSTRUCTION OF HOUDE STREET AND APPURTENANT WORK

Sheet Title:

HOUDE STREET CONSTRUCTION PLAN

Contract No: ED-2014-14

Date: 6-24-2014

Scale: 1"=20'

Sheet No.: 3

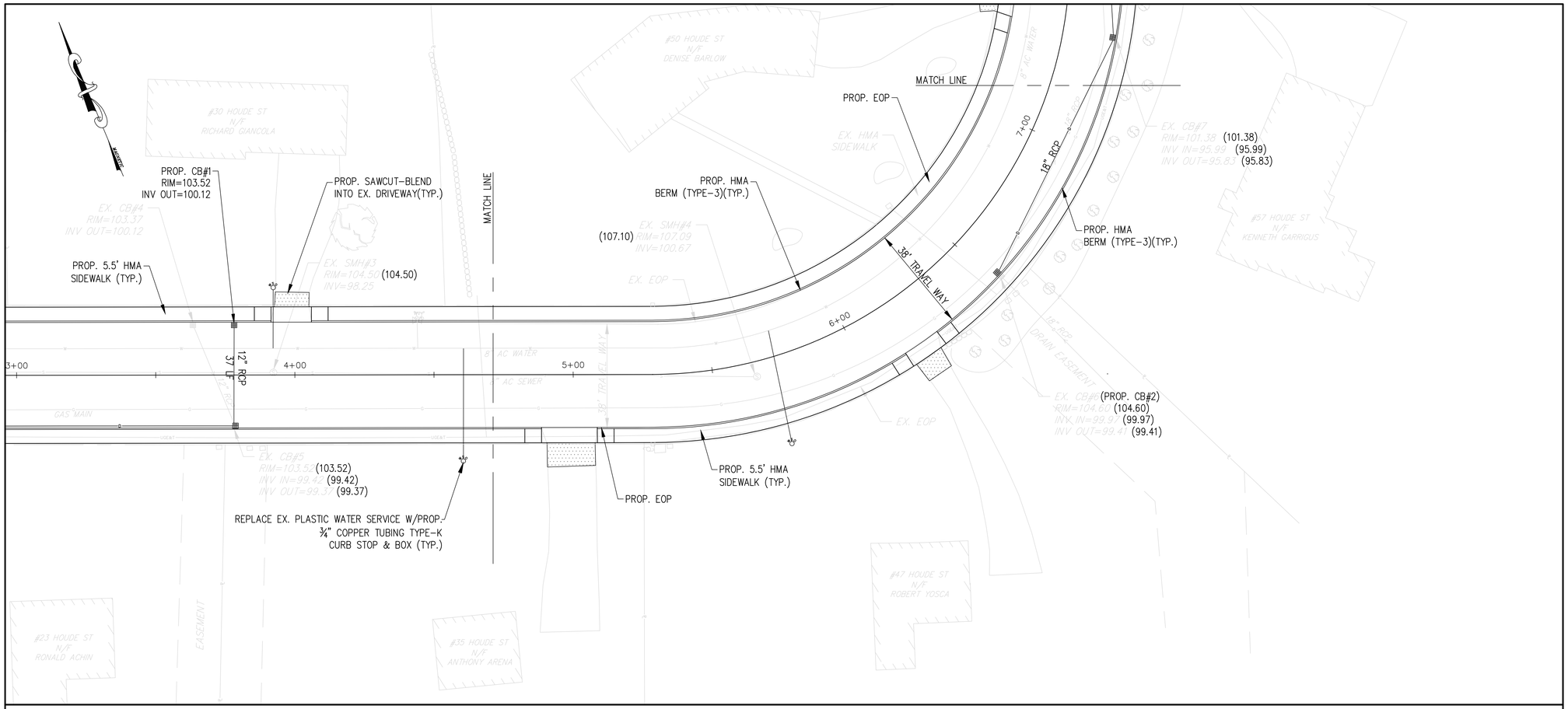

ROADWAY CENTERLINE PROFILE

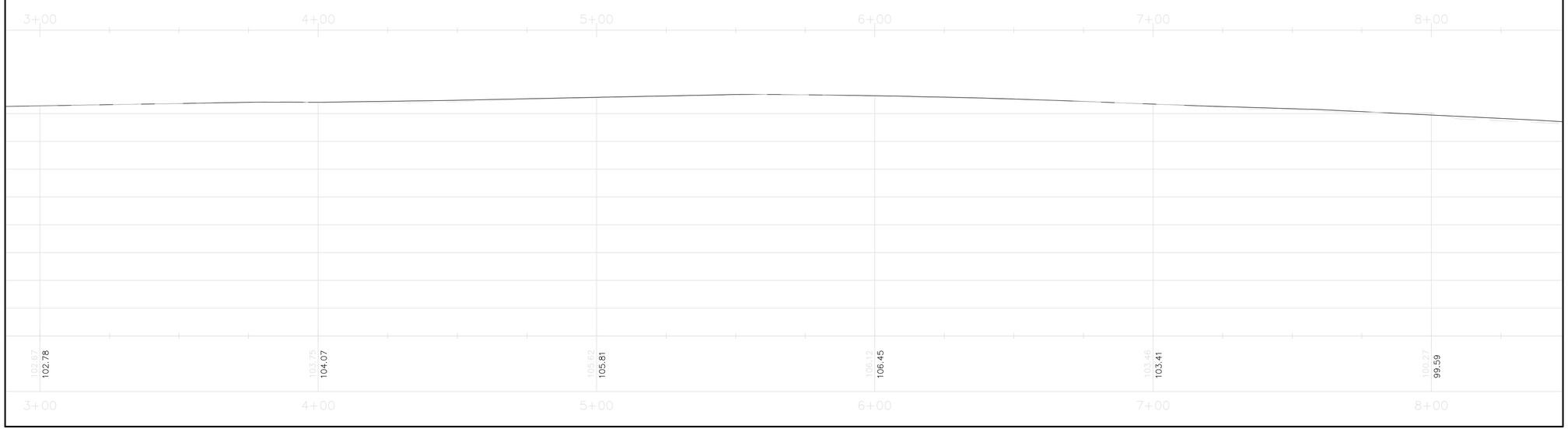

CITY OF MARLBOROUGH
DEPARTMENT OF PUBLIC WORKS
Engineering Division
135 Neil Street
Marlborough, MA 01752
p. (508) 624-6910
f. (508) 624-7699
www.marlborough-ma.gov

REVISIONS

No.	Date	Description
1.	7/1	MJD COMMENTS

Drawn By:	Designed By:	Checked By:	Approved By:
JED	JED	MJD	ENG

Project Title:

RECONSTRUCTION OF HOUDE STREET AND APPURTENANT WORK

Sheet Title:

HOUDE STREET CONSTRUCTION PLAN

Contract No: ED-2014-14

Date: 6-24-2014

Scale: 1"=20'

Sheet No.: 4

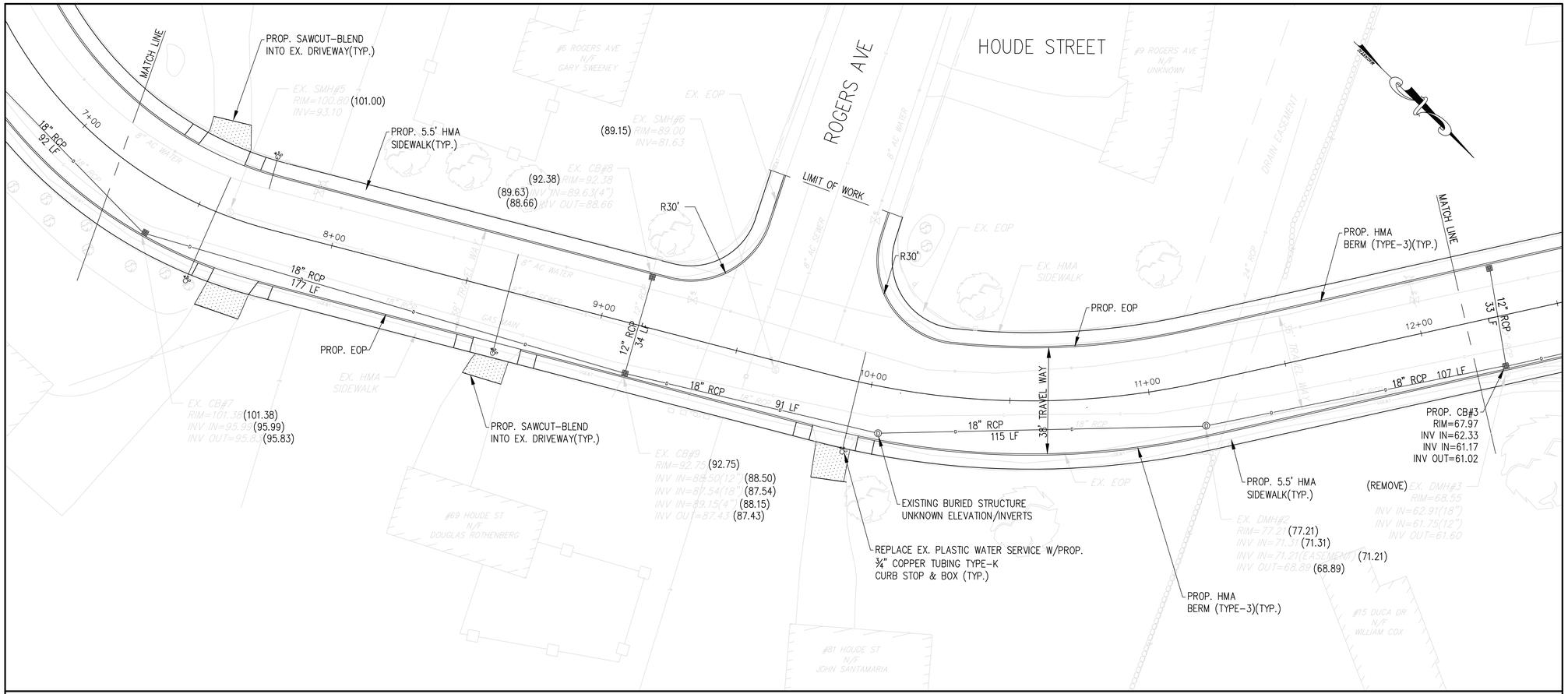

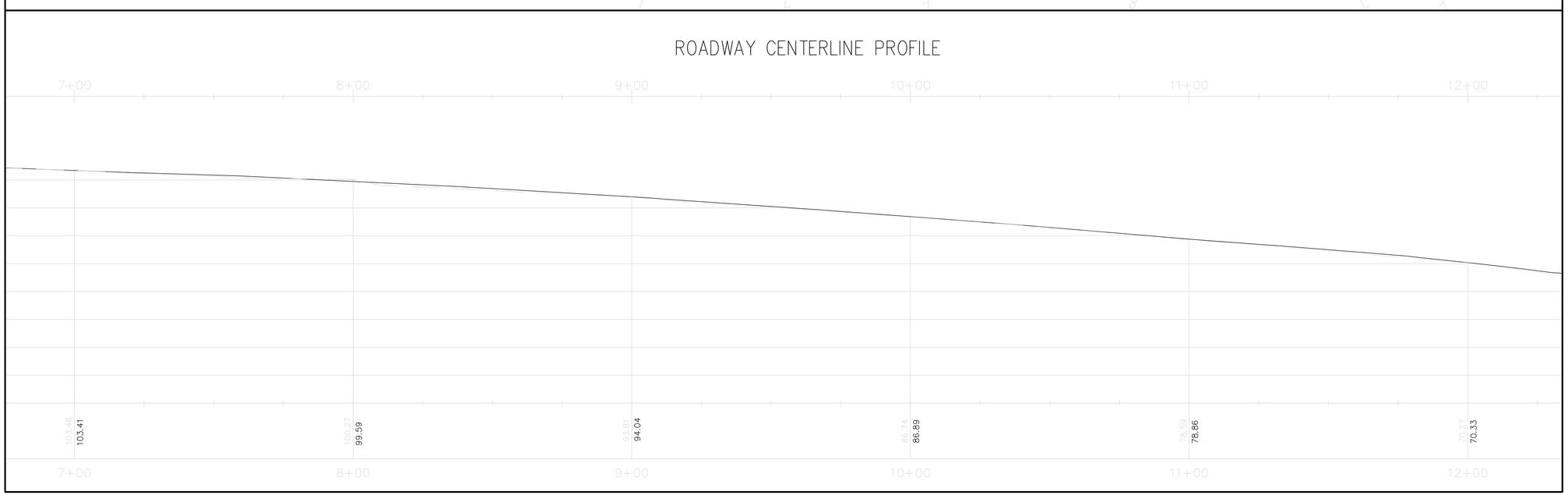

CITY OF MARLBOROUGH
DEPARTMENT OF PUBLIC WORKS
Engineering Division
135 Neil Street
Marlborough, MA 01752
p. (508) 624-6910
f. (508) 624-7699
www.marlborough-ma.gov

REVISIONS

No.	Date	Description
1.	7/1	MJD COMMENTS

Drawn By:	Designed By:	Checked By:	Approved By:
JED	JED	MJD	ENG

Project Title:

RECONSTRUCTION OF HOUDE STREET AND APPURTENANT WORK

Sheet Title:

HOUDE STREET CONSTRUCTION PLAN

Contract No: ED-2014-14

Date: 6-24-2014

Scale: 1"=20'

Sheet No.: 5

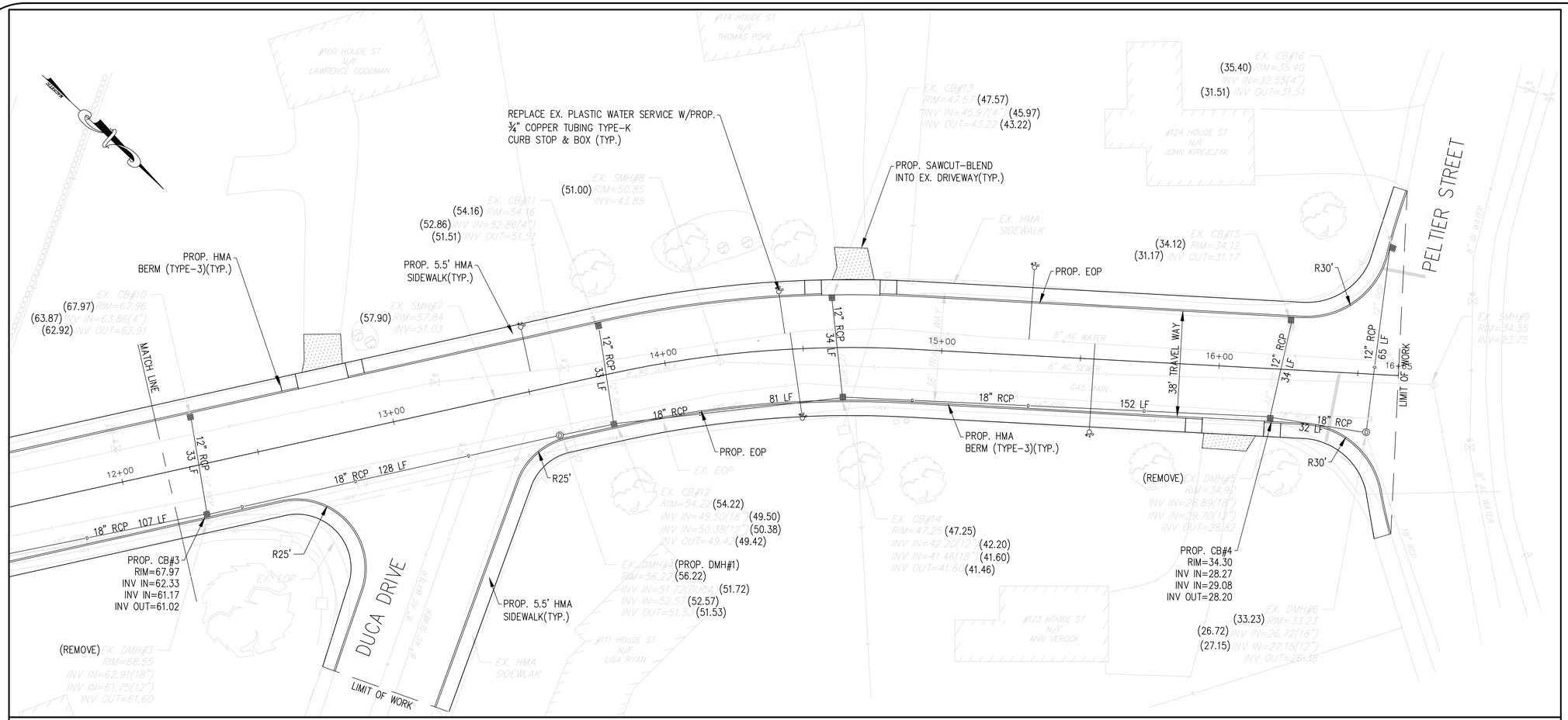

ROADWAY CENTERLINE PROFILE

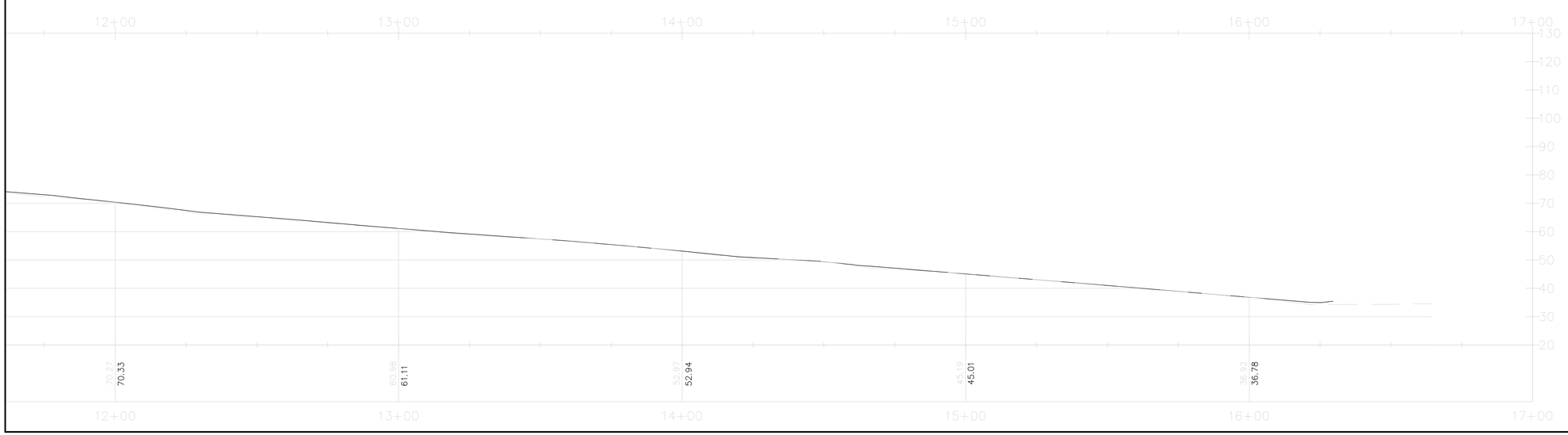

CITY OF MARLBOROUGH
DEPARTMENT OF PUBLIC WORKS

Engineering Division
135 Neil Street
Marlborough, MA 01752
p. (508) 624-6910
f. (508) 624-7699
www.marlborough-ma.gov

REVISIONS

No.	Date	Description
1.	7/1	MJD COMMENTS

Drawn By:	Designed By:	Checked By:	Approved By:
ED	ED	MJD	ENG

Project Title:

RECONSTRUCTION OF HOUDE STREET AND APPURTENANT WORK

Sheet Title:

HOUDE STREET CONSTRUCTION PLAN

Contract No: ED-2014-14

Date: 6-24-2014

Scale: 1"=20'

Sheet No.: 6

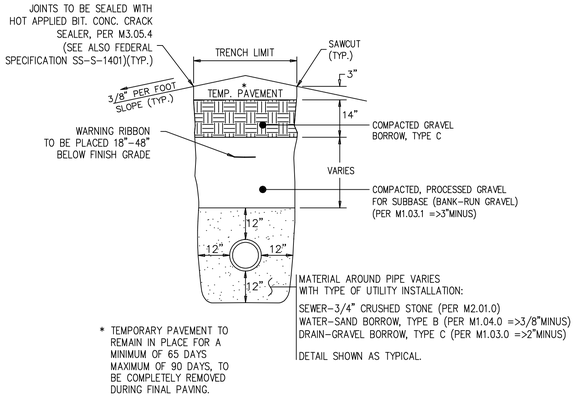

TYPICAL
EXCAVATION TRENCH
N.T.S.

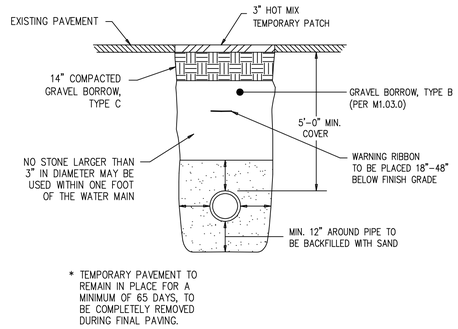

TYPICAL
WATER TRENCH
N.T.S.

CONSTRUCTION NOTES

THE FOLLOWING DESCRIBES MATERIALS AND METHODS AS THEY PERTAIN TO ROAD OPENING WORK. ALL WORK SHALL CONFORM TO THE 1988 STANDARD SPECIFICATIONS FOR HIGHWAYS AND BRIDGES, AND ALL SUBSEQUENT SUPPLEMENTAL SPECIFICATIONS THERETO.

BACKFILL MATERIALS

EXCAVATIONS IN THE STREET PAVEMENT AREAS SHALL BE CAREFULLY BACKFILLED WITH LAYERS OF SUITABLE GRAVEL. THE TWELVE (12) INCHES OF BEDDING MATERIAL AROUND PIPES SHALL BE SAND (M1.04.0) FOR WATER, ¾" CRUSHED STONE (M2.01.0) FOR SEWER, GRAVEL BORROW – TYPE C (M1.03.0) FOR DRAIN OR AS SPECIFIED BY THE OWNER OF THE UTILITY AND APPROVED BY THE CITY OF MARLBOROUGH. BACKFILL MATERIAL SHALL CONSIST OF CONTROLLED DENSITY FILL (CDF) – TYPE 1E OR 2E (M4.08.0) FOR ALL MAJOR ROADWAYS OF THE CITY OR AS DIRECTED BY THE COMMISSIONER OF PUBLIC WORKS.

SUITABLE GRAVEL MATERIAL FOR BACKFILLING SHALL BE GRANULAR FILL CONSISTING OF SOIL SUBSTANTIALLY FREE FROM CLAY, ORGANIC MATERIALS, LOAM, WOOD, TRASH OR OTHER OBJECTIONABLE MATERIAL WHICH MAY NOT BE COMPRESSIBLE OR WHICH CANNOT BE PROPERTY COMPACTED. IT SHALL NOT CONTAIN STONES, BROKEN CONCRETE, MASONRY RUBBLE OR OTHER SIMILAR MATERIALS. IT SHALL HAVE PHYSICAL PROPERTIES SUCH THAT IT CAN BE READILY SPREAD AND COMPACTED. IT SHALL NOT CONTAIN ANY SNOW, ICE OR FROZEN SOIL.

COMPACTION OF BACKFILL

BACKFILL SHALL BE UNIFORMLY DISTRIBUTED IN SUCCESSIVE LAYERS, EACH LAYER BEING THOROUGHLY COMPACTED BEFORE THE SUCCEEDING LAYER IS PLACED. THE ENTIRE WIDTH OF THE TRENCH SHALL BE MECHANICALLY OR HAND TAMPED IN SIX (6) INCH LIFTS, A MINIMUM OF TWO (2) FEET ABOVE THE UTILITY INSTALLATION, AND MECHANICALLY TAMPED THE REMAINDER OF THE FILL IN LIFT DEPTHS NOT GREATER THAN SIX (6) INCHES. THE TOP LAYER OF BACKFILL SHALL BE FOURTEEN (14) INCHES (IN A TEMPORARY TRENCH), AND TWELVE (12) INCHES (IN A PERMANENT TRENCH) OF GRAVEL COMPACTED TO 97% OF MAXIMUM DENSITY.

GRADING ROLLING AND FINISHING

PAVEMENT PLACED SHALL BE PLACED AND RAKED TO A UNIFORM SURFACE, ROLLED TO THE REQUIRED THICKNESS AND TO A GRADE THAT WILL MATCH THE EXISTING BITUMINOUS ROAD SURFACE. THE PERMITTEE SHALL MAINTAIN THE SURFACING AND SHALL PROMPTLY FILL WITH SIMILAR MATERIAL ANY DEPRESSION AND HOLES THAT MAY OCCUR SO AS TO KEEP THE SURFACING IN A SAFE AND SATISFACTORY CONDITION FOR TRAFFIC.

TEMPORARY PAVEMENT

A TEMPORARY PAVEMENT SHALL BE PLACED ON THE SURFACE OF THE FILL AND THOROUGHLY COMPACTED. A TEMPORARY PAVEMENT SHALL BE CLASS I BITUMINOUS CONCRETE TYPE I-1 THREE (3) INCHES THICK (SEE EXCAVATION TRENCH DETAIL). "COLD PATCH" MAY BE ALLOWED IF APPROVED BY THE COMMISSIONER OF PUBLIC WORKS DUE TO ADVERSE WEATHER CONDITIONS. IF PLATES ARE USED THEY SHALL BE RAMPED TO MATCH THE EXISTING PAVEMENT. TEMPORARY PAVING OR STEEL PLATING SHALL IMMEDIATELY FOLLOW THE BACKFILLING OPERATION.

PERMANENT PAVING

THE FINAL BITUMINOUS CONCRETE SURFACE SHALL NOT BE PLACED ANY EARLIER THAN 65 DAYS OR NO LATER THAN 90 DAYS FROM THE DATE OF COMPLETION OF THE TEMPORARY SURFACE WITHOUT APPROVAL FROM THE COMMISSIONER OF PUBLIC WORKS. THE TEMPORARY PAVEMENT AND SUB-BASE SHALL BE EXCAVATED TO THE GRADE REQUIRED BY THE PERMIT PRIOR TO PLACEMENT OF THE FINAL BITUMINOUS CONCRETE SURFACE. THE BINDER COURSE SHALL NOT BE LESS THAN THE EXISTING ROADWAY BINDER COURSE AND SHALL NOT BE LESS THAN THREE AND ONE-HALF (3 ½) INCHES IN DEPTH AND THE TOP COURSE SHALL BE ONE AND ONE-HALF (1 ½) INCHES IN DEPTH. IN SOME INSTANCES, BEYOND A SIMPLE TRENCH EXCAVATION, PAVEMENT DETAILS AND RESURFACING REQUIREMENTS WILL BE INCLUDED AS A SPECIAL CONDITION IN THE PERMIT.

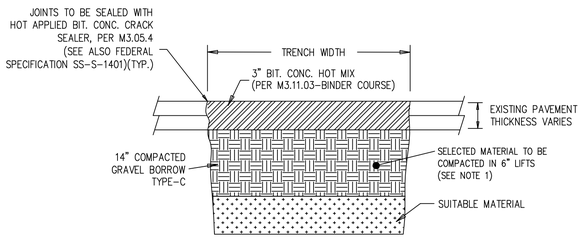

NOTE 1:

COMPACTION EQUIPMENT SHALL MEET OR EXCEED THE MINIMUM REQUIREMENTS TO OBTAIN THE COMPACTION STANDARDS DESCRIBED IN THE CONSTRUCTION NOTES, UNLESS OTHERWISE APPROVED BY THE CITY ENGINEER. IN PROXIMITY TO STRUCTURES, A JUMPING JACK COMPACTOR SHALL BE REQUIRED.

TEMPORARY TRENCH PAVING
TYPICAL SECTION
N.T.S

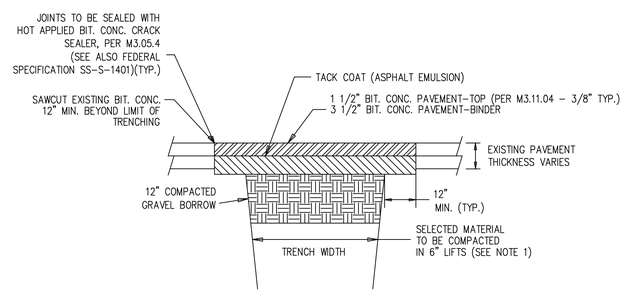

NOTE 1:

COMPACTION EQUIPMENT SHALL MEET OR EXCEED THE MINIMUM REQUIREMENTS TO OBTAIN THE COMPACTION STANDARDS DESCRIBED IN THE CONSTRUCTION NOTES UNLESS OTHERWISE APPROVED BY THE CITY ENGINEER. IN PROXIMITY TO STRUCTURES, A JUMPING JACK COMPACTOR SHALL BE REQUIRED.

TYPICAL
FINAL TRENCH PAVING
N.T.S

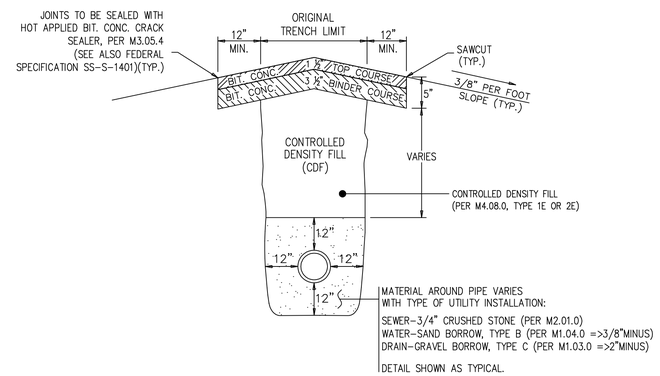

TYPICAL
FLOWABLE FILL TRENCH
N.T.S.

CITY OF MARLBOROUGH
DEPARTMENT OF PUBLIC WORKS
Engineering Division
135 Neil Street
Marlborough, MA 01752
p. (508) 624-6910
f. (508) 624-7699
www.marlborough-ma.gov

REVISIONS

No.	Date	Description
1.		

Drawn By:	Designed By:	Checked By:	Approved By:
ENG	ENG	ENG	ENG

Project Title:

RECONSTRUCTION OF HOUDE STREET AND APPURTENANT WORK

Sheet Title:

TRENCH DETAILS

Contract No: ED-2014-14	Sheet No.: 7
Date: 6-24-2014	
Scale: N.T.S.	

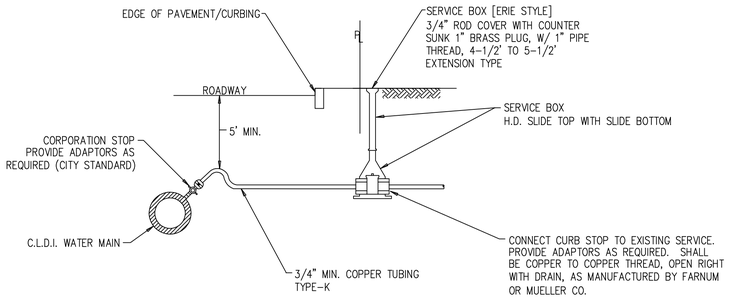

NOTES:

1. FLUSH ALL NEW SERVICE LINES PRIOR TO CONNECTION.
2. UPON CONNECTION, REMOVE AND DISPOSE OF OLD SERVICE LINE FROM CORPORATION VALVE TO CURB STOP, CURB STOP AND BOX.
2. COPPER TUBING TYPE-K AND CURB STOP TO BE ENCASED IN 12" MIN. SAND.
3. ALL FITTINGS, CONNECTIONS, CORPORATIONS, CURB STOPS AND SERVICE APPURTENANCES SHALL BE SERVICE BRASS AS FOLLOWS: SERVICE BRASS SHALL CONFORM TO AWWA STANDARD C-800 (LATEST REVISION) AND PACK JOINT END CONNECTIONS SHALL CONSIST OF BUNA-N BEVELED GASKET FOR WATERTIGHT SEAL. AN INDEPENDENT, SPLIT-CLAMP LOCKING DEVICE OR STAINLESS STEEL BEVELED GRIPPER SHALL BE INCORPORATED IN THE DESIGN FOR ADDITIONAL RESTRAINT. FORD, MUELLER, OR RED HED SERVICE BRASS IS ACCEPTED WITHOUT SUBSTITUTE.

TYPICAL SERVICE CONNECTION

N.T.S.

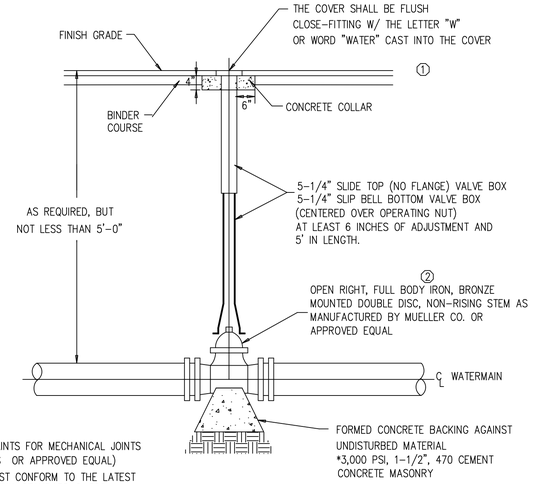

NOTES:

1. PROVIDE RESTRAINTS FOR MECHANICAL JOINTS (MEGALUG, RODS OR APPROVED EQUAL)
2. GATE VALVE MUST CONFORM TO THE LATEST REVISION OF AWWA STANDARD C-509

TYPICAL GATE VALVE

N.T.S.

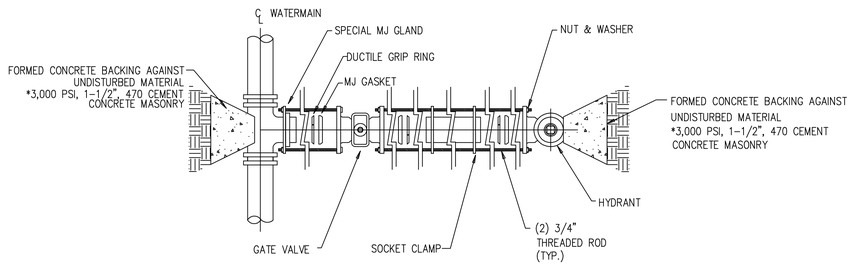

NOTE 1:

ALL TEES, GATES AND BENDS ARE TO BE RODDED W/ MEGA LUGS OR FRICTION CLAMPS AT BELL JOINTS.

VALVE CONNECTION

N.T.S.

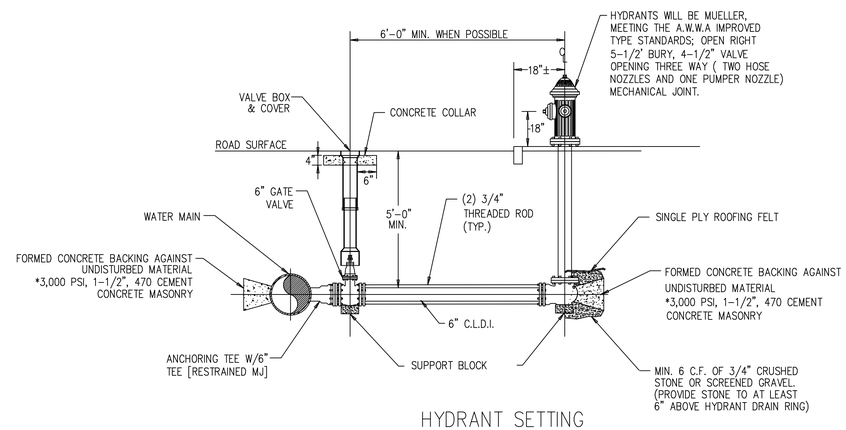

HYDRANT SETTING WITH VALVE

N.T.S.

NOTES:

1. PROVIDE HYDRANT AND VALVE JOINTS WITH MECHANICAL JOINTS (MEGALUG OR APPROVED EQUAL).
2. SUPPORT BLOCKS TO BE PRESSURE TREATED WOOD OR CONCRETE MASONRY BLOCKS.
3. ALL VALVES OPEN RIGHT.

CITY OF MARLBOROUGH
DEPARTMENT OF PUBLIC WORKS
Engineering Division
135 Neil Street
Marlborough, MA 01752
p. (508) 624-6910
f. (508) 624-7699
www.marlborough-ma.gov

REVISIONS

No.	Date	Description
1.		

Drawn By:	Designed By:	Checked By:	Approved By:
ENG	ENG	ENG	ENG

Project Title:

RECONSTRUCTION OF HOUDE STREET AND APPURTENANT WORK

Sheet Title:

WATER DETAILS

Contract No: ED-2014-14	Sheet No.: 8
Date: 6-24-2014	
Scale: N.T.S.	

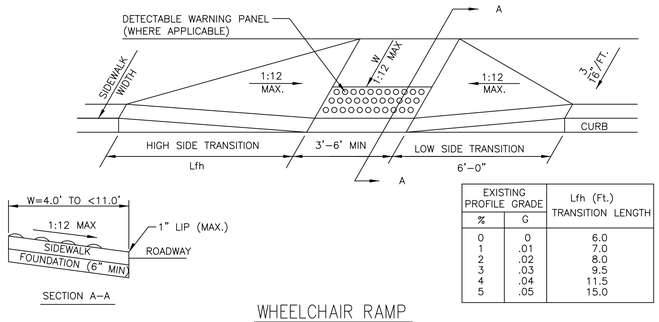

EXISTING PROFILE GRADE		Lfh (Ft.) TRANSITION LENGTH
%	G	
0	0	6.0
1	.01	7.0
2	.02	8.0
3	.03	9.5
4	.04	11.5
5	.05	15.0

WHEELCHAIR RAMP GRADE REQUIREMENTS

(USING 6" CURB REVEAL)
N.T.S.

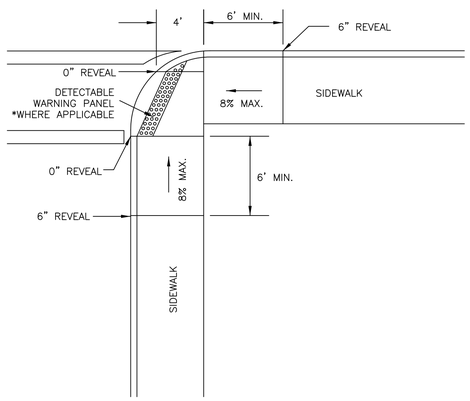

TEE–INTERSECTION WHEEL CHAIR RAMP

N.T.S

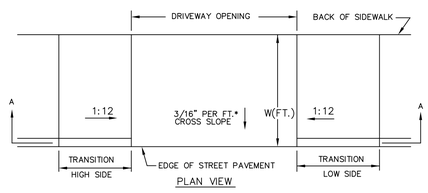

3/16" PER FOOT EQUALS A SLOPE OF 1.5625%
MAXIMUM SLOPE PER A.D.A. REGULATION IS 2.0%
(A.D.A. – AMERICANS WITH DISABILITIES ACT)

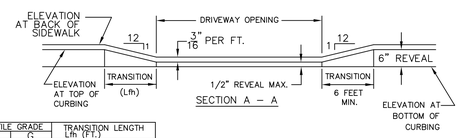

PROFILE GRADE		TRANSITION LENGTH
%	G	Lfh (FT.)
0	0	6.0
1	.01	7.0
2	.02	8.0
3	.03	9.5
4	.04	11.5
5+	.05	15.0 MAX.

DRIVEWAY OPENING DETAIL

N.T.S.

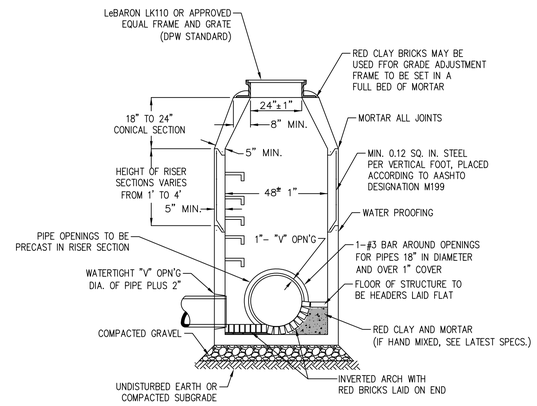

PRECAST CONCRETE MANHOLE DETAIL

N.T.S.

NOTE:
ALL CONCRETE STRUCTURES SHALL BE CAPABLE OF WITHSTANDING H20 LOADING

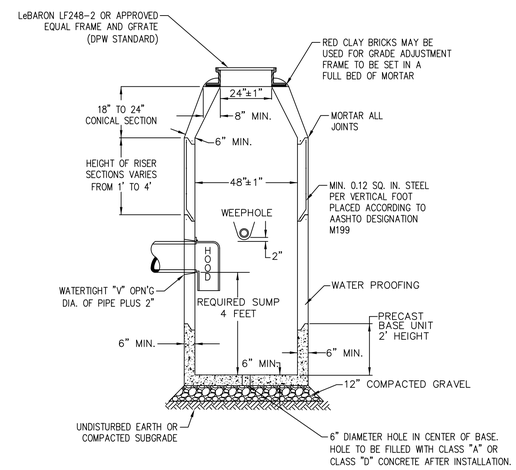

PRECAST CONCRETE CATCH BASIN DETAIL

N.T.S.

NOTE:
1.) ALL CONCRETE STRUCTURES SHALL BE CAPABLE OF WITHSTANDING H20 LOADING
2.) HOOD TO BE INCLUDED IN CONTRACT PRICE FOR CATCH BASIN

CITY OF MARLBOROUGH
DEPARTMENT OF PUBLIC WORKS
Engineering Division
135 Neil Street
Marlborough, MA 01752
p. (508) 624-6910
f. (508) 624-7699
www.marlborough-ma.gov

REVISIONS

No.	Date	Description
1.		

Drawn By:	Designed By:	Checked By:	Approved By:
ENG	ENG	MJP	ENG

Project Title:

RECONSTRUCTION OF HOUDE STREET AND APPURTENANT WORK

Sheet Title:

CONSTRUCTION DETAILS

Contract No: ED–2014–14
Date: 6–24–2014
Scale: N.T.S.
Sheet No.: 9

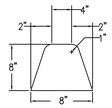

TYPE 3

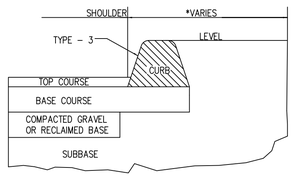

BIT. CONC. CURB (TYPE-3)

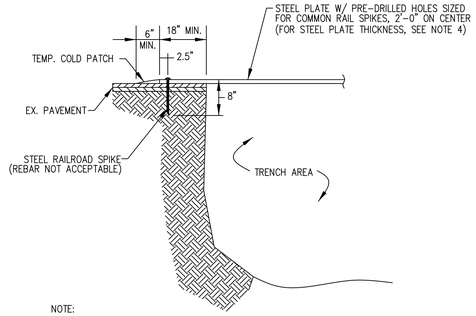

NOTE:
1. THE CITY RESERVES THE RIGHT NOT TO ALLOW THE USE OF STEEL PLATES TO SECURE TRENCHES AT ANY TIME THROUGHOUT CONSTRUCTION.
2. PLACE 48" X 48" ORANGE AND BLACK CONSTRUCTION SIGN, STATING "STEEL PLATES 100 FT," TO PROVIDE DRIVERS WITH ADVANCED NOTICE. SEE TRAFFIC MANAGEMENT PLAN FOR PLACEMENT OF SIGNAGE.
3. NOT MORE THAN ONE (1) STEEL PLATE SHALL BE USED AT ANY TIME AND CAN NOT BE USED ON EXCAVATIONS GREATER THAN 7-FEET WIDE.
4. STEEL PLATE DIMENSIONS AND THICKNESS SHALL BE DESIGNED BY THE CONTRACTOR. STEEL PLATE THICKNESS SHALL BE DESIGNED TO ALLOW DEFLECTION OF NOT MORE THAN 0.25".
5. PROVIDE WOOD WEDGES UNDER PLATE EDGES AT UNEVEN SURFACES TO MINIMIZE MOVEMENT.

STEEL PLATE DETAIL

N.T.S.

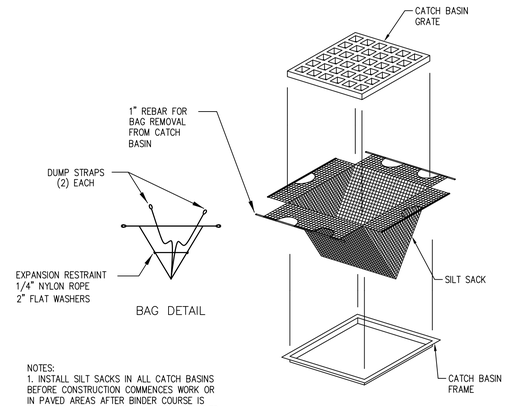

NOTES:
1. INSTALL SILT SACKS IN ALL CATCH BASINS BEFORE CONSTRUCTION COMMENCES WORK OR IN PAVED AREAS AFTER BINDER COURSE IS PLACED AND HAY BALES HAVE BEEN REMOVED.
2. GRATE TO BE PLACED OVER SILT SACKS.
3. SILT SACKS SHALL BE INSPECTED PERIODICALLY AND AFTER ALL STORM EVENTS AND CLEANING OR REPLACEMENT SHALL BE PERFORMED PROMPTLY AS NEED.

SILT SACK DETAIL

N.T.S.

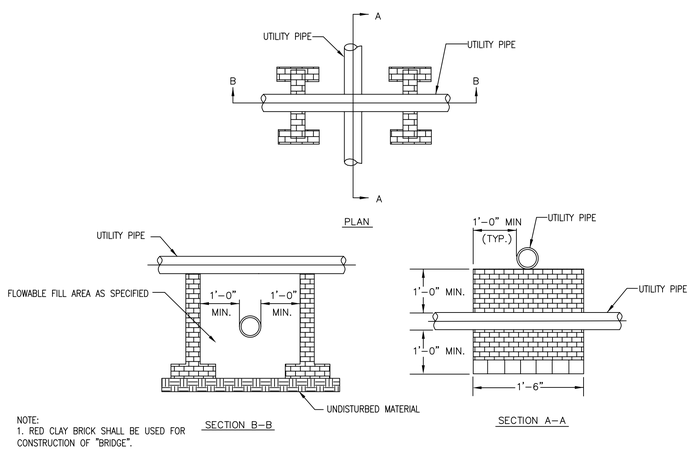

NOTE:
1. RED CLAY BRICK SHALL BE USED FOR CONSTRUCTION OF "BRIDGE".

UTILITY CROSSING BRIDGE

N.T.S.

NOTE: MAILBOX POST TO BE SET PRIOR TO PLACEMENT OF CEMENT CONCRETE

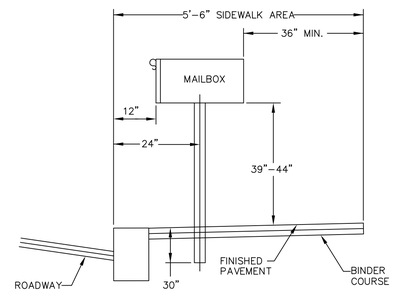

MAILBOX PERPENDICULAR

N.T.S.

CITY OF MARLBOROUGH
DEPARTMENT OF PUBLIC WORKS
Engineering Division
135 Neil Street
Marlborough, MA 01752
p. (508) 624-6910
f. (508) 624-7699
www.marlborough-ma.gov

REVISIONS

No.	Date	Description
1.		

Drawn By:	Designed By:	Checked By:	Approved By:
ENG	ENG	MJP	ENG

Project Title:

RECONSTRUCTION OF HOUDE STREET AND APPURTENANT WORK

Sheet Title:

CONSTRUCTION DETAILS

Contract No: ED-2014-14

Date: 6-24-2014

Scale: N.T.S.

Sheet No.: 10

CONSTRUCTION SIGN LEGEND

IDENTIFICATION NUMBER	SIZE OF SIGN		TEXT	TEXT DIMENSIONS			COLOR			UNIT AREA IN SQUARE FEET
	WIDTH	HEIGHT		LETTER HEIGHT	VERTICAL SPACING	ARROW	BACK-GROUND	LEGEND	BORDER	
W20-1D	48"	48"	STEEL PLATES 100 FT	MUTCD STANDARD DETAIL			MUTCD STANDARD DETAIL			16.0
W20-1A	48"	48"	ROAD WORK AHEAD							16.0
W20-1B	48"	48"	ROAD WORK 1000 FT							16.0
W20-1C	48"	48"	ROAD WORK 500 FT							16.0
W20-4	48"	48"	ONE LANE ROAD AHEAD							16.0
W20-7b	48"	48"	BE PREPARED TO STOP							16.0
W20-8	48"	48"	POLICE OFFICER AHEAD							16.0
G20-2	36"	18"	END ROAD WORK							4.5
R11-2	48"	30"	ROAD CLOSED							10.0
W5-1	48"	48"	ROAD NARROWS							16.0
W1-4L	30"	30"								6.25
W1-4R	30"	30"								6.25
M4-8A	24"	18"	END DETOUR							3.0
M4-9L	30"	24"	DETOUR							5.0
M4-9R	30"	24"	DETOUR							5.0
M4-9V	30"	24"	DETOUR							5.0
W20-2	48"	48"	DETOUR AHEAD							16.0

LEGEND

SINGLE DIRECTION TRAFFIC FLOW ARROW
DOUBLE DIRECTION TRAFFIC FLOW ARROW
TRAFFIC MANAGEMENT SIGN
TRAFFIC BARREL / DRUM
CHANGEABLE MESSAGE SIGN
LANE DELINEATOR
CONE
POLICE DETAIL
SPECIAL LIGHTING UNIT
SLU (LT)
PROPOSED WORK AREA

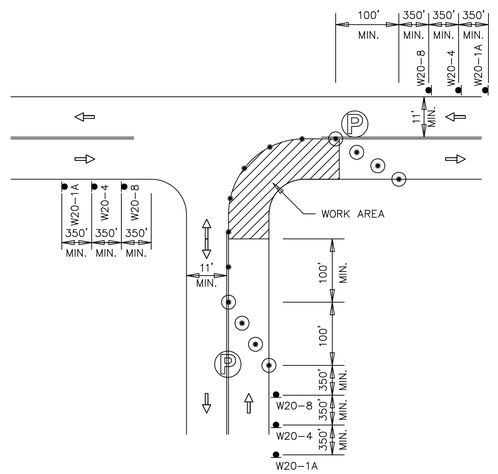

NOTE:
1. ADVANCE WARNING SIGN PLACEMENT TO BE ADJUSTED AS NECESSARY.
2. ALL DRUMS AND CONES TO BE SPACED @ 20' O.C.

ONE LANE BI-DIRECTIONAL TRAFFIC AT INTERSECTIONS

N.T.S.

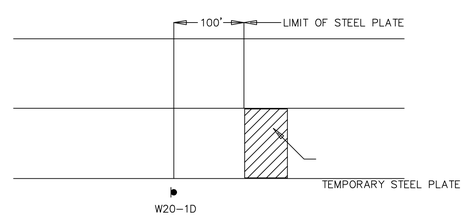

TRENCH PLATE SIGNING

N.T.S.

GENERAL NOTES

1. ALL CONSTRUCTION SIGNING, DRUMS, BARRICADES AND OTHER DEVICES SHALL CONFORM WITH THE LATEST EDITION OF THE MANUAL ON UNIFORM TRAFFIC CONTROL DEVICES (MUTCD) AS AMENDED.

2. ALL DRUMS SHALL BE APPROXIMATELY PLACED AND MOVED AS NECESSARY TO MAINTAIN ADEQUATE ABUTTER ACCESS AT ALL TIMES. WORK MAY REQUIRE ADDITIONAL SIGNS, DRUMS AND OTHER TRAFFIC CONTROL DEVICES, GRADING AND TEMPORARY PAVEMENT FOR PASSAGE OF PEDESTRIAN, VEHICULAR AND EMERGENCY TRAFFIC THROUGH THE WORK AREAS, BOTH DURING AND AFTER WORKING HOURS, TO MAINTAIN SUCH ACCESS.

3. THE CONTRACTOR SHALL NOTIFY EACH ABUTTER AT LEAST 24 HOURS IN ADVANCE OF THE START OF ANY WORK THAT WILL REQUIRE THE TEMPORARY CLOSURE OF ACCESS, SUCH AS EXISTING PAVEMENT EXCAVATION, TEMPORARY DRIVEWAY PAVEMENT PLACEMENT AND SIMILAR OPERATIONS.

4. DURING WORK IN INTERSECTIONS A MINIMUM OF ONE LANE OF ALTERNATING TRAFFIC SHALL BE ALLOWED TO PASS AT ALL TIMES. (POLICE DETAILS SHALL BE PRESENT DURING THIS WORK.)

5. GRADE SEPARATIONS IN EXCESS OF 2" DURING NON-WORKING HOURS WILL REQUIRE DELINEATION BY USE OF DRUMS.

6. EXCAVATION EDGES IN EXCESS OF 4" DEEP SHALL BE PROTECTED DURING NON-WORKING HOURS BY BACKFILLING WITH A WEDGE OF GRAVEL OR SOIL TO COMPACTED 4:1 SLOPE.

7. 11' MINIMUM TRAVEL LANE WIDTHS SHALL BE MAINTAINED AT ALL TIMES.

8. NON-ESSENTIALS TRAFFIC CONTROL DEVICES SHALL BE COVERED OR REMOVED DURING NON-WORKING HOURS.

9. TRAFFIC MANAGEMENT SHALL INCLUDE CONSIDERATIONS FOR PEDESTRIANS ACCESS AT ALL TIMES.

10. NO SIGNAGE SHALL BE INSTALLED ON UTILITY POLES OR OTHER PRIVATE PROPERTY UNLESS CONTRACTOR RECEIVES WRITTEN PERMISSION FROM OWNER AND PROVIDES A COPY OF SAID AGREEMENT TO THE ENGINEER.

11. SPECIFIC SIGNAGE SHALL BE USED WHEN TEMPORARY TRENCH PLATES ARE INSTALLED. (SEE DETAIL ON THIS SHEET).

12. TRAFFIC MANAGEMENT PLAN REPRESENTS MINIMUM REQUIREMENTS. CONTRACTOR TO BE SOLELY RESPONSIBLE FOR TRAFFIC MANAGEMENT AND SAFETY IN WORK ZONE AREAS. DETOUR SHALL ONLY BE ESTABLISHED AND/OR ALTERED BY WITH THE APPROVAL OF THE ENGINEER.

13. THE PLACEMENT OF THE VARIABLE MESSAGE BOARDS SHALL BE IN PLACE TWO WEEKS PRIOR TO THE START OF CONSTRUCTION. THESE BOARDS ARE TO BE PAID FOR UNDER ITEM NO. 851 SAFETY CONTROLS FOR CONSTRUCTION OPERATIONS.

14. HOURS OF WORK SHALL BE MONDAY-FRIDAY 7:00 A.M. – 3:30 P.M. THERE WILL BE NO WORK PERFORMED ON SATURDAYS, SUNDAYS OR WHEN THE D.P.W IS CLOSED DUE TO HOLIDAY CLOSINGS.

15. THE CONTRACTOR IS RESPONSIBLE FOR NOTIFYING THE RESPECTIVE PUBLIC SERVICE CORPORATIONS OR OFFICIALS OF THEIR INTENTIONS AT LEAST ONE WEEK IN ADVANCE OF THE COMMENCEMENT OF OPERATIONS. THE CONTRACTOR MAY HAVE TO COORDINATE ON A DAILY BASIS IF THE DETOUR OR WORK ZONES HAVE CHANGED. FOR A LIST OF SAID CORPORATIONS PLEASE SEE THE CONTRACT DOCUMENTS "GENERAL CONDITIONS".

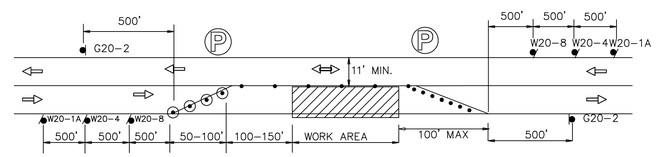

TYPICAL TWO WAY ALTERNATING TRAFFIC

N.T.S.

NOTE: THIS DETAIL SHOWS A RIGHT LANE CLOSURE DETAIL. THIS DETAIL CAN ALSO BE USED FOR LEFT LANE CLOSURES, WITH THE SIGN PLACEMENT REVERSED AS APPROPRIATE.

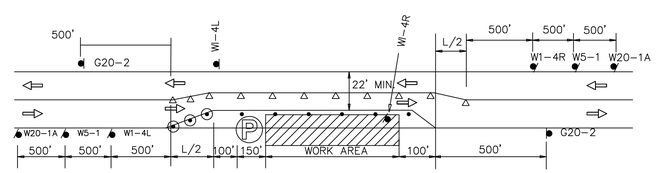

TYPICAL TWO WAY STREET LANE SHIFT

N.T.S.

NOTE: THIS DETAIL SHOWS A RIGHT LANE CLOSURE DETAIL. THIS DETAIL CAN ALSO BE USED FOR LEFT LANE CLOSURES, WITH THE SIGN PLACEMENT REVERSED AS APPROPRIATE.

$L=WS^2/60$ (FEET) FOR 40 MPH OR LESS
$L=WS$ FOR 45 MPH OR MORE

W=WIDTH OF OFFSET (FT)
S= POSTED SPEED LIMIT (MPH)

OPERATIONAL SIGNING

N.T.S.

ALL DRUMS AND SIGNS ARE SHOWN AS THEY SHOULD APPEAR DURING THE WORKING DAY, OR WHILE OPERATING IN THE WORK ZONE.

CITY OF MARLBOROUGH
DEPARTMENT OF PUBLIC WORKS
Engineering Division
135 Neil Street
Marlborough, MA 01752
p. (508) 624-6910
f. (508) 624-7699
www.marlborough-ma.gov

REVISIONS

No.	Date	Description
1.		

Drawn By:	Designed By:	Checked By:	Approved By:
ENG	ENG	ENG	ENG

Project Title:
RECONSTRUCTION OF HOUDE STREET AND APPURTENANT WORK

Sheet Title:
TRAFFIC DETAILS

Contract No: ED-2014-14
Date: 6-24-2014
Scale: N.T.S.
Sheet No.: 11